A Beginner's Guide from Glen-L Boat Designs

BUILDING YOUR OWN BOAT

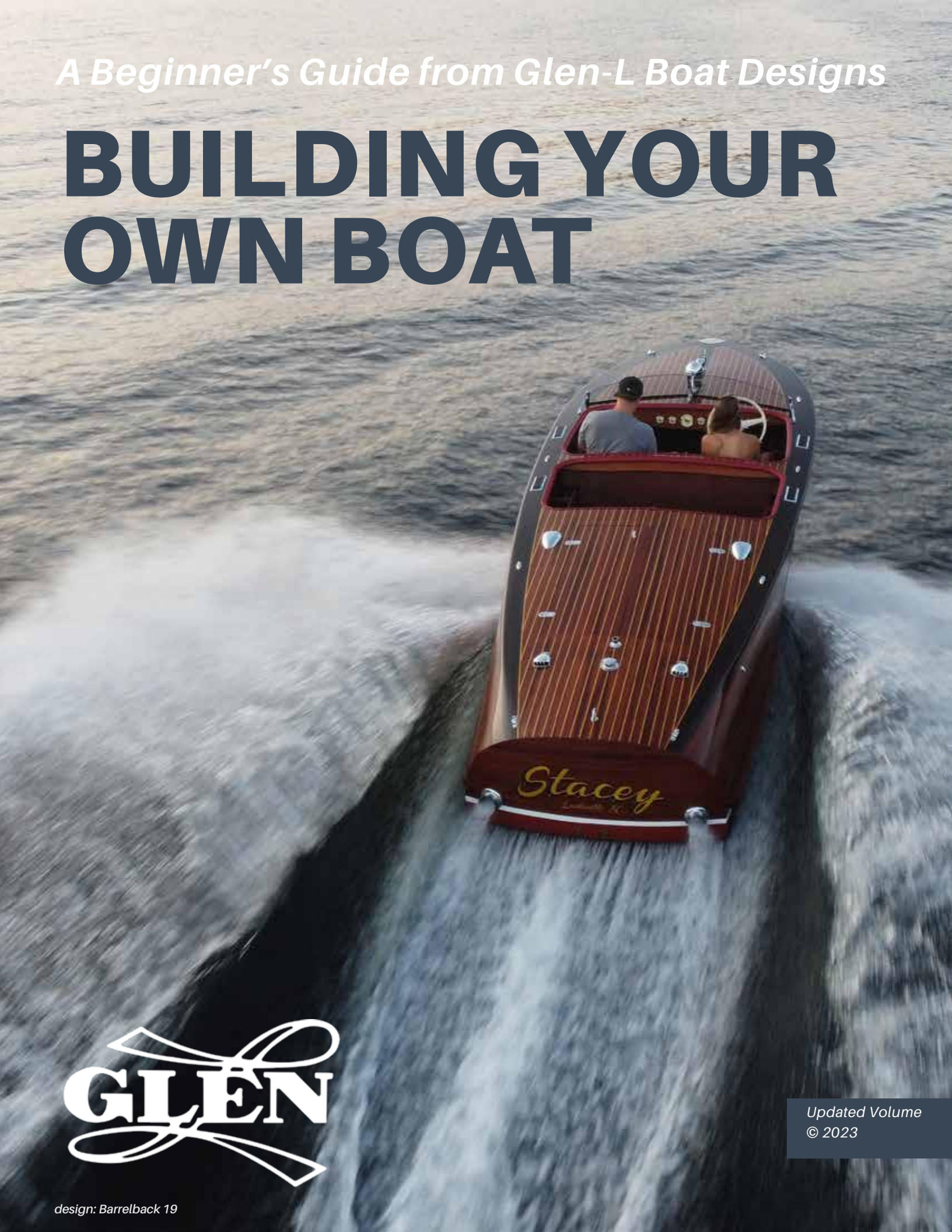

GLEN

design: Barrelback 19

Updated Volume
© 2023







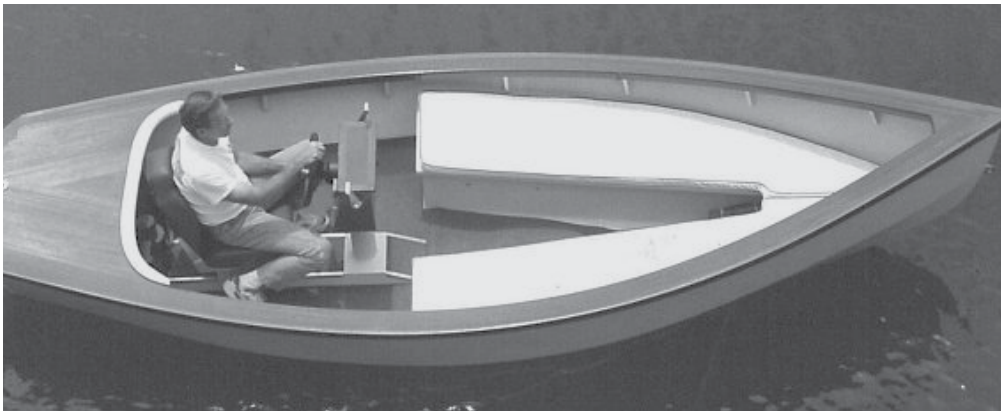

Glen-L Boat Designs

glen-l.com | established 1953 | support@glen-l.com



WELCOME

TO GLEN-L BOAT DESIGNS. WE ARE A DIY COMPANY FOUNDED IN 1953.

During a recent lunch break, we were sitting around shooting the bull and someone brought up the popularity of the DO-IT-YOURSELF movement. It's so popular the designation DIY is commonplace and how, and as a company, Glen-L personifies this movement.

As a small company we can't afford many of the luxuries of large corporations, but perhaps that's a good thing. Advertising comes to mind. We do very little—mostly relying instead on word of mouth endorsements from our friends and customers.

Of course we've always done the designing in house, writing the instructions and catalog information, and working out the kits to be furnished. It's all done by us—DIY. Many don't realize we even supply some custom fittings made from patterns for sand cast parts such as fins, and we even sell our own simple steering system.

The manufacturer for our exposed steering drum for small boats went out of business and we still had a demand. A pattern for the castings required would be expensive to make; even defrayed over a reasonable number of sales, it wasn't practical. So DIY. Fortunately we had the ability to make patterns for sand castings. So we designed an improved version of the unit, and made the patterns. Even with outside foundry work and machining (we neither have a foundry nor machine shop), the total cost to the consumer, you guys out there, was very fair.

Our books are another example. When we considered writing our first book, we contacted the Eastern publishing houses and they were very cooperative. They would edit our text, prepare and print the book and distribute it. Great? Not so, we would be charged for all these service and we would receive a small royalty on each book sold; no guarantee that any would be sold. So again DIY.

Overnight we became publishers doing everything the big houses did ourselves and we produced other books as well.

Can you the consumer tell if this is a DIY project? Absolutely not. Our boatbuilding books are highly-regarded and full to the gunnels with valuable information. These authoritative references are also sold wholesale to various booksellers around the world.

Our website is one costly area where we've required a little help along the way. While we're comfortable writing copy and handling our own design work and photography, in order to make the browsing and shopping experience efficient we've hired experts.

What DIY projects do we have pending? You'll have to wait and see, but you can be sure whatever we've got planned will be too expensive to hire out, so we'll use our own resources and work with our builders and friends to bring you something even better than outside experts could've created.

###

The following information is a collection of articles written by the Glen-L staff over the last seventy years. Our hope is that you find this information invaluable as you seek to increase your boat building knowledge. As always, if you have any questions please give us a call or send us an email and we'll do what we can to help.

If you would like to further information about building a boat, we suggest our book, Boatbuilding with Plywood.

TABLE OF CONTENTS

01 Section

Boat Design | CHOOSING, OUTFITTING OR MODIFYING THE RIGHT BOAT *page 5*

1A. What's the difference between drawing and designing a boat?
1B. Planing vs Displacement Boats
1C. DISPLACEMENT by Simpson's Rule
1D. Displacement for Canoes and Kayaks
1E. CB... What the heck is it anyway?
1F. About buttocks, waterlines and diagonals
1G. Can I lengthen the DESIGN?
1H. Determining hull capacity
1I. Is bigger better?
1J. RANGE—How far can i go on a tank?
1K. Do you really want to go that fast?
1L. Hydroplanes, cats, monohulls and such
1M. Self draining cockpits
1N. Cold-molded history

02 Section

Building and Skills | TIPS, TECHNIQUES AND TRICKS OF THE TRADE *page 20*

2A. Conventional plywood or Stitch and Glue construction?
2B. About plywood
2C. Bills of Materials & Laminating Schedules
2D. Setting up - The foundation for building a boat
2E. Setting up - The building FORm
2F. Sheet plywood development (How to Use Patterns)
2G. Using random-random Stock
2H. The case for laminations
2I. Fastening sheet plywood to frames
2J. Notches for longitudinals
2K. Fitting the chine
2L. Fairing tools
2M. Double planking hints

03 Section

Mechanical | ON STEERING AND INBOARD MOTORS *page 37*

3A. Steering for boats
3B. Outfitting your inboard
3C. Rudders

SECTION

01 BOAT DESIGN

CHOOSING, OUTFITTING OR MODIFYING THE RIGHT BOAT



design: RIO Driftboat

1A. WHAT'S THE DIFFERENCE BETWEEN *DRAWING* AND *DESIGNING* A BOAT?

Most anyone can draw a boat; designing one takes a lot more effort and ability.

Of primary importance in designing a small boat is knowledge gained by experience. At GLEN-L we design boats, build testing prototypes, and then test the in-water performance. Most designers don't have the luxury of being able to test their final product. We do and the experience gained is invaluable for designing future craft.

A new design is started by establishing the parameters. The length, beam, depth, and type of boat is decided on; power or sail and the material the boat is to be built from must be selected. Every boat is a compromise and practical experience dictates the inevitable give and take features that are best for the particular craft being designed.

Designers use coefficients that provide comparative factors to determine the general shape of the midsection and other factors. The range of coefficients for a given type of boat have been gathered over the years and are given in books on boat design. But a designers experience of the performance of previous boats is used to temper the figures, as little information has been published on smaller boats.

The basic lines of the boat are developed showing three views; plan, profile, and sections. A designer must rough out a set of lines that hopefully match the desired coefficients. The term hopefully is used because accurate coefficients cannot be determined until the lines are finalized.

The displacement of the boat must be estimated; this is the total weight of the hull, motor, passengers, and everything on board when the boat is on the water. Then an estimated waterline is sketched on the lines.

A boat will displace a weight of water equal to its displacement. The underwater volume can be calculated by determining areas of equally spaced sections ("s") and entering them into Simpsons 1/3 Rule formula; boat design computer programs do it quicker. The calculated displacement should be very close to the one estimated. If not, back to the drawing board to raise or lower the waterline or adjust the lines and recalculate displacement.

A boat has a balance point called center of buoyancy (CB) that is comparable to the pivot point on a teeter totter. The CB can be determined by using figures obtained from Simpsons Rule; the volume on either side of the CB must be equal. But the CB must be located at the ideal position to carry the loadings. The approximate desirable location of the CB is obtained from published figures or percentages of the waterline length gained by experience. The CB is virtually always aft of the mid-points of the waterline length. If the calculated CB is not within the design parameter its back to square one and modification of the lines.

But the designer isn't finished. Weights have been estimated and must be finalized. The weight of every component of a boat must be calculated and it's distance from the CB noted. Consider what is involved. A wooden boat may have a 1 14" x 3 1/2" keel 18' long. The volume of the member times the weight of the wood for a given volume is calculated and the center of that weight in relationship to the CB determined. And this is done for everything that will be in the boat. If the total weight isn't equal or close to the displacement or the weights are not equally distributed about the CB, modifications will be necessary. An experienced designer gets an "eye" or "feel" for a set of lines and can usually finalize a set of lines with minimal revisions. A neophyte designer may spend days or weeks bringing all of the factors into balance.

A sailboat will need to be balanced so it will sail properly without lee or weather helm. Rudder area must be calculated to provide good steering and the keel or centerboard determined to provide directional stability If a boat is towed sideways through the water so the longitudinal centerline of the hull is perpendicular to the towing line that point on the waterline is called the center of lateral resistance or CLR. The combined area of the sails must be positioned about the CLR properly (called "lead") to assure balance. And of course the sail area forces must be balanced with adequate ballast so the boat will not capsize.

Powerboats will require calculations on the most desirable horsepower based on the hull characteristics. If the hull is a semi displacement type, with limited speed potential, it doesn't make sense to overpower the boat. Conversely underpowering a planing hull will make a boat a real dog.

Some of the information necessary to make the many calculations are given in design textbooks. Other factors are obtained through technical writings and papers collected by a designer over the years. And if you test boats as we do at GLEN-L, parameters that work can be applied to future designs.

Most creditable designers have a background of engineering or schooling on boat design through universities and specialized boat design courses. Schooling covering the design of smaller craft however is almost non-existent and the experience gained through testing prototypes is invaluable on this size craft.

The foregoing outlines the general procedure that must be gone through to design as opposed to drawing a boat. Computers can do many of the calculations. However, a computer can't design a boat. Someone must put in the figures to form the boat and use the knowledge to select the proper parameters. It's been stated that designing a good looking, well performing boat, is a combination of engineering and art and the best way to develop this combination is through experience. And with more than 60 years of designing boats GLEN-L has experience plus.



design: GL14

Books

How to Design a Boat
by John Teale

Principles of Yacht Design
by Lars Larsson, Rolf Eliasson,
Michal Orych

Schools

Westlawn Institute
of Marine Technology
info@westlawn.edu
westlawn.edu

The Landing School
Yacht Design Diploma
inquiries@landingschool.edu
landingschool.edu



design: Monaco

1B. PLANING VS DISPLACEMENT BOATS

Two questions we get fairly often are "Can I put a sail on (name of planing boat)?" and "If I use a larger motor than you recommend (on a displacement boat) can I increase the speed?"

Different hull shapes have advantages for different applications. The ideal characteristics for sailboats, row boats, and eventually low speed power boats have been long understood. These boats need a hull shape that will move easily through the water with a minimum of power. When more power became available, it was found that a new hull form was needed. In order to overcome the limitations of the bow wave, it was necessary to rise out of the water, to plane. On planing hulls, the bottom shape is extremely important to performance, with minor variations causing sometimes dramatic problems. Let's look at the two basic hull forms to understand why they work the way they do.

Displacement hulls: The overriding fact about displacement boats is that their speed is limited by their length. Speed in knots = 1.34 X square root of the waterline length. The other part of the story is that these hulls are very fuel efficient; they require little power to reach their maximum speed. Attempting to exceed hull speed is guaranteed to waste fuel and money and gain little if anything in speed. Row boats and sailboats are most often displacement hulls.

Planing hulls: In theory, a full planing hull (with infinite power) has no speed limit. Our TORNADOS and THUNDERBOLTS regularly exceed 100 mph in competition, with one THUNDERBOLT clocked at 148 mph. Planing boats, when they achieve planing speed, ride on top of the water. They are, however, not properly shaped to be efficient at slow speeds. In our previous Web Letter, we discussed how to re-crisp the trailing edge on a planing boat, but did not explain why.

Why: When a boat is planing, the water flows off the bottom in a sheet and the wave breaks behind the boat. If there is a downturn at the transom (hook), the bow will be driven down, increasing wetted surface and decreasing speed potential. If there is a bottom rise at the transom (rocker), the hull will tend to porpoise (jump out of the water and fall back into the water). If the trailing edge of the bottom at the transom is rounded, the boat will behave as though it has a rocker. This results from water following the radiused bottom, up the transom, sucking the transom down. Speed amplifies these effects, with minor imperfections only causing performance problems at high



design: Double Eagle

speed. Having said all this, there are instances when you might want very minor hooks or rockers in the bottom ...this is what cavitation plates and trim tabs are for.

Others: Yes, there are others. There are boats that fit between displacement and planing boats; boats that exceed the speed limitations of displacement boats, but do not have the higher speed potential of full planing boats. They tend to be less efficient than displacement boats at slow speeds, and less efficient that planing boats at high speed. Their exact characteristics will depend on where their hull form falls between displacement and planing hulls.

Q.

Is it possible to put a sail on the 13' FISHERMAN?

Answer: Yes, however, because the FISHERMAN is a planing hull it will be very inefficient (slow) under sail.

Q.

If I double the horsepower on the NOYO TRAWLER how much more speed can I get?

Answer: Very little, perhaps a half knot, but your fuel consumption could increase dramatically when the motor runs at full speed.

1C. DISPLACEMENT BY SIMPSON'S RULE

###

Displacement is a common term used in yacht design but few comprehend its meaning and how it is obtained.

A floating body displaces an amount of water that exactly equals the weight of the floating object. Let's suppose we have a bucket of water filled to the brim. If we put a floating object in the bucket that weighs exactly one pound, one pound of water will flow over the top of the bucket or be "displaced". This is a "gimmie" and has been understood since Archeimedes discovered the principle in his bath tub.

A cubic foot of fresh water, one foot square and one foot high, will weigh about 62.5 pounds while saltwater will weigh about 64 pounds. The term "about" is used as impurities can change the decimal point. We can determine the displacement of a boat by finding the cubic feet of volume of the portion of the boat below the waterline and multiplying by the weight of water.

So, how does the designer use this information? Displacement as stated, is the total weight of the floating object. This means the boat weight plus that of everything normally carried on board including passengers. When designing a new boat this total weight must be calculated by figuring the weight of all individual pieces of wood, etc. This is a very tedious process that is one of the least fun parts of boat design.

Next the designer will estimate where he expects the waterline to fall and calculate the area of the hull below the waterline. If the boat is a simple rectangle the cubic content can be obtained by multiplying the underwater height x width x length (in feet) to obtain the volume in cubic feet. This volume is then multiplied by the weight of a cubic foot of water to obtain the estimated displacement weight of the hull. If this displacement weight does not match the weight that the designer previously calculated, the waterline is is adjusted and the process repeated. Doesn't sound that bad, but remember, a boat is not uniform in shape.

There are many ways to determine the volume of an irregular shape; a computer with a proper program can solve the problem quickly if the proper factors are entered. There are several other methods but let's go back to a way of calculating volume that is basic and old as the hills: **Simpson's Rule.**

Simpson's Rule is used to determine the square area of the surface of a plane, such as the area of one cross section of a hull. When the areas of a number of sections have been obtained, the cubic contents of the whole can be calculated.

Let's use an example of how this rule is used to determine volume, then displacement. Suppose a boat has a waterline (estimated) length of 20'. This length is divided into an even number of equally spaced parts drawn perpendicular to the waterline. Let's use 10 parts 2' apart and number them from left to right 0 through 10 (the bow).

Next the areas in feet of these sections must be determined. The designers use a tool called a "planimeter", with dials and wheels that determines area when traced around an irregular plane. But the area can also be figured by laying the drawing over graph paper to a scale compatible with the drawing, counting the squares in the plane and estimating partial ones. The area on one half of the boat section is determined and multiplied by two. A typical boat will have no area at station #10.

After the areas of all of the 10 sections have been obtained, list them in columnar form with the station number (#) in the first column and three additional columns, labeled A, B, and C. List the area of each station in column A. In column B enter the following numbers: Station 1# and #10 enter a 1, all odd stations station a 2, and all even stations a 4. You should have a column starting and ending with 1 and alternating 2 and 4. Kinda sounds like voodoo doesn't it?

Next multiply each of the figures in the B column by the area listed in column A. Put the result in column C. When all station rows in column C have been figured, add them together. So far, the point of this exercise has been to get the total of column C. The next step is to multiply the column C total by the station spacing in feet, (2' in our example), and the result divided by 3 to give the underwater volume in cubic feet. Multiply this by the weight of water (62.5 or 64 lbs./cu. ft.) and the result is the displacement in pounds.

That wasn't so bad was it? But, the displacement figured does not equal the calculated weight of the boat. So it's back to the beginning, adjust the waterline up or down, and try again.

There are many ways to estimate the waterline with reasonable accuracy and numerous attempts are seldom required. But our original intent was to present or re-present an old rule that figures displacement. Simpson's Rule is a handy one and can be used to find the area of any irregular plane as well as the volume. ###

1D. DISPLACEMENT FOR CANOES AND KAYAKS

A common question is "how much weight will she hold?" This especially applies to smaller boats such as canoes or kayaks.

The following will give a rough idea of the displacement of a typical double ended craft such as a kayak or canoe. It will not be accurate with boats that have a transom.

The factors required can usually be measured from the boat or possibly the lines or sections. All measurements must be in feet. These are:

D = **draft .** Estimate draft at the widest point of the boat or approximate midpoint; usually about 3" - 6" on the typical canoe / kayak.

B = **maximum beam at bottom.** If round bottom measure width about 3" above keel.

L = **waterline length** or length chine point to chine point fore and aft measured along the centerline of the boat.

Disp. = **displacement,** weight of everything on board plus boat weight.

To find the displacement at the estimated waterline use the following formula.

.6D x B x L x 62 = **Displacement in pounds, fresh water.**

Let's take an example:

We have a kayak that has a draft of 6" (.5'), a midships bottom width of 20" (*1.67'), and a waterline length of 17'. Putting these figures in the formula:

.6 x .5 x 1.67 x 17 x 62 = **528 lbs. fresh water displacement.**

But let's say we know the total weight to be carried, boat weight, passengers and gear, in other words displacement: but how far will the boat sink in the water? Suppose we have a displacement of 450 lbs. Using the kayak example above the formula is altered to solve for draft.

$$\frac{\text{Displacement}}{.6 \times B \times L \times 62} = \text{Draft (D)} \quad \textbf{or} \quad \frac{450}{.6 \times 1.67 \times 17 \times 62} = .43' \text{ or } 5\ 1/8'' \text{ draft}$$

Are the formulae accurate? No, but close enough for estimates. Basically it calculates the underwater volume and converts with a factor (.6) derived from a group of kayak whose characteristics had been calculated.

Be practical when you consider load carrying ability. Many people, however, are not. They want a small kayak that will carry two full blown adults with lots of gear. Don't expect to load the boat so there are only a couple of inches of freeboard. Some even want to carry several passengers in a 12' kayak. Use a string to simulate the boat outline on the living room floor. Sit the passengers contemplated in the outline and you will readily see if what you desire is practical. ###

* Convert inches to feet by dividing by 12.



design: Harbormaster

1E. CB: WHAT THE HECK IS IT?

CB is the abbreviation for "Center of Buoyancy" used on Glen-L plans. The CB can be compared to the fulcrum of an in-balance teeter-totter. The CB is the longitudinal balance point of the underwater volume. Add weight aft of the CB and the boat will go down by the stern, forward and it will be down at the bow.

When the designer designs a boat of any size, he calculates the underwater volume, estimates the displacement, and determines the CB, however this initial figure is only a starting point. The weights of all the fixed components in the finished boat must actually be calculated. Yes, this means figuring the weight of each batten, gusset, keel, plank, plus everything in the boat including passengers, motor, etc. Hopefully, the total weight should be very close to the original displacement estimate. If not, the displacement must be re-figured to match the calculated weights and a new CB point determined.

Now comes the fun. Each component part of the boat must have the location of its center of gravity measured relative to the CB; this is then multiplied by its weight. When finished, the designer has a long list including each part of the boat with the distance x weight listed; if the total of figures fore and aft the CB are equal, the hull is in balance. Obviously, this is seldom the case. When not, some weights must be shifted to bring the hull into balance. Although the weights of the components of the hull are fixed, some objects can be moved; fuel and water tanks are easily shifted and are usually the first choice of most home-builders. But are tanks empty or full? Although designers use a half full figure, due to the varying weight, the liquids are best located as close to the CB as possible. It isn't good practice to move passengers to balance the hull. Although the location of the helmsperson is usually fixed, it isn't practical to specify where each passenger must sit. It is simply a process of elimination to determine what can be shifted and how much. Back to our teeter-totter: the farther an object is from the CB, the more its weight affects the balance. A "weight-value" for each component is figured by multiplying the distance from the CB by its weight. A weight of 10 pounds 1' aft of the CB could be balanced by 2 lbs. 5' forward: 10 x 1 = 2 x 5. In extreme cases, the designer may find it necessary to alter the boat lines to shift the CB, however the options are limited by the parameters of the design. This, sometimes frustrating balancing act, is the reason many designers are gray haired or bald.

Displacement or semi-displacement powerboats can be brought into trim by adding ballast. Balancing a sailboat can often be accomplished by moving existing ballast. However, as speed is a function of weight in planing boats, adding ballast for balance is undesirable.

Fast planing powerboats are usually not designed to be in balance at rest. In a typical 10' outboard planning hull, the driver can often shift his weight forward to get the boat quickly on plane, then shift aft and the hull will be relatively level. Obviously shifting the driver forward far enough to have an effect in a larger boat is impractical. Outboards with power trim, afterplanes (cavitation plates) and similar appendages to lift the stern and bring the hull on plane more quickly. Any fixed appendage used to force the bow up or down causes resistance and detracts from performance.

Open planing craft, such as deck boats with lots of passenger space, are only in balance with certain loading. The typical bow rider seems to invite everyone up forward but this imbalance becomes dangerous if carried to the extreme. For best performance, cruising type boats of any size will have superior performance if properly balanced about the CB.

When balance is an important factor, our plans show the CB on the lines drawings. If you are thinking of adding extra fuel in that big open bow space, think again. What are you going to locate aft to balance the weight x distance contemplated forward? Keep the boat in balance for best performance.

###

1F. ABOUT BUTTOCKS, WATERLINES AND DIAGONALS

This discussion primarily applies to vee bottom boats, although the terminology is similar to those with a round bilge.

The terms buttocks (butt), waterlines (wl), and diagonals (diag) are referred to on the "Lines Drawing" of a set of plans. Unless the boat is being lofted, they will have little purpose as far as building the boat is concerned. However, understanding why these lines are important, and their purpose will enable a builder to better understand how the lines of a boat are generated.

The "Lines Drawing" of a boat will basically consist of three views: Plan or top view, Profile or side view, and cross Sections taken through the hull at intervals commonly called stations, which usually coincide with the location of the frames or forms. Three primary lines dictate the shape of the typical vee bottom boat: chine, junction of the side and bottom planking; sheer, top edge of the side planking; and keel, the junction of the bottom planking along the centerline.

The keel definition is loosely defined to simplify the description. Often this line is called fairbody, the junction of the outside of the planking as it meets the keel.

If the section lines, chine to sheer and chine to keel, are straight, no other lines are required to illustrate the shape of the boat. However, most craft will have some curvature of the sides or bottom as shown in section. Most builders think of a sheet plywood boat as having straight sections; some may, but most will be of convex shape. Concavity is not practical unless it is at the extreme bow or stern, usually minimal in nature.

Buttocks are used to show the amount of deviation from a straight line the bottom sections (chine to keel) have. Buttocks are shown in plan view as straight lines parallel to the keel, usually two or three at least on each side of the boat. In section view they are straight vertical lines parallel to the centerline and spaced from the centerline identical to those drawn on the plan view. In profile they are curved lines that illustrate the height the buttock crosses the section line. These curved lines must be smooth and fair. Altering section lines and re-fairing the profile buttock line is an ongoing process. When properly faired, the lines in section and profile must be smooth flowing and fair.

However, the section line may intersect a buttock at such an angle that determining the exact point is difficult. To improve accuracy, a diagonal is used, shown as a straight line in section, usually to cross the planking as close to 90 degrees as possible. One is usually at forty five degrees to the centerline, others as required to make the definition point of a crossing line accurate. The distance is plotted from the intersection of the diagonal at the centerline, along the diagonal to the planking, at each section of the plan view. This should result in the plan view diagonal being a fair curving line. If not, the entire process is repeated, adjusting the points as required to assure each buttock and diagonal are fair lines and the bottom sections smooth flowing lines.

Waterlines are shown in profile as straight lines parallel to the base or reference line that in turn is at right angles to the station perpendiculars. Usually a minimum of two and usually more are used to define the side contour at each section. They must be smooth curving lines on the plan view and develop smooth curves on the sides as shown on the section views. The points of curved lines are shifted to accomplish this; this is quite similar to what was done for the bottom.

Section lines are the frames or forms that shape the boat. If the lines are not accurate, the boat may have unsightly dips or bumps that will be an eyesore and detrimental to performance.

The finished lines are still inaccurate. On a small scale a pencil line width may represent an 1/8" or more. To finally true up the lines and get accurate sections, the boat must be lofted and this means going through the same process in full scale but, of course, the small scale drawing will make the task easier. Many years ago Glen-L decided that lofting was not that easy for most builders, nor something they really wanted to do. Imagine laying even the smallest boat in actual size, incorporating all views shown in the "Lines Drawing" for the boat.

So, when building with Glen-L plans and patterns, you can forget all of the above and not really care what a diagonal or buttock is; you go directly to building the boat!

1G. CAN I LENGTHEN THE DESIGN?

The answer can be *yes*, *no*, and *maybe*.

Lengthening or shortening a sailboat is not recommended. There are simply too many variables: center of lateral resistance, sail center of effort, lead and other factors are altered when the length is changed. Designers go to considerable effort to get the relationship of these various factors correct. If they are changed, the results can be questionable.

Most human or motor powered boats can be lengthened or shortened as much as 10%. However, there are exceptions that will be discussed later. Why 10%, can't I go 18%? Possibly, the lines can be lengthened or shortened BUT, we know from experience that up to the 10% factor, the integrity of the design remains basically unchanged. All length factors are altered 10%. This means the location of a centrally located motor, CG (center of gravity, and location of major weights are also shifted by the 10% factor. Beyond the 10% factor the characteristics can be altered; put in another way we get into a gray area. It may be OK but it might not. Then too, the construction may not be adequate when a craft is excessively lengthened. Why take a chance?

Altering length when done properly works well and is simple

to accomplish; do it incorrectly and one big mess will probably result. You can't simply add a frame at midpoint or at the stern. A boat has curving lines and each section is (usually) different. Lengthening by this method will cause unfair lines that will be almost impossible to correct and may well alter the hull characteristics. The correct way is to re-space each of the stations or frames from the aft end of the stem to the transom a proportionate amount up to 10%. If frame spacing is equal or varies, multiply by the percentage factor being used. As an example if frames are uniformly spaced 18" apart and the 10% factor is used, each spacing will be increased 1.8" (.10 x 18") or rounded off 1 3/4" (1.75").

Some designs are impractical to lengthen. Stitch and glue boats with full size patterns are a prime example. Simply extending the side and bottom templates for the most part simply won't work and the results can be questionable. Check the web site, many that have tried it had real problems.

Boats that have a sawn harpin are another type that doesn't lend itself to easily lengthening. A harpin is a portion of the boat sheer line as seen in plan view that is sawn to shape rather than bent. If the boat is lengthened in the harpin area the contour of that member changes; the harpin pattern given won't fit properly into the frames. Yes, the harpin shape could be re-drawn, stretching (or shortening) the spacing a proportionate amount. But unless you have some lofting or drafting knowledge, re-drawing the contour may not be easy.

Can the beam be changed? Not practically, this changes all the frame patterns and the curvature (on most) of the side frames. Never attempt to alter the chine beam; this will alter the characteristics to such an extent the result will be unknown.

Can the depth be increased? Possibly a small amount by extending the side frame members equally. This will also increase the beam and could exceed the practical or legal towing width. Boats with excessive flare or tumblehome are best not changed as increasing the side frame member curvature could be a problem.

Every design is different so a universal statement as to whether a design length can be altered is impractical. If in doubt ask the designer.

###

1H. DETERMINING HULL CAPACITY

QUESTION: Sea Knight.I was looking over the USCG Safety Standards for Backyard Boatbuilders to get the information on max. load/person/gear. On page 6 it begins with filling the boat with water and counting the buckets full, then figuring out the weight of water it took to fill it. After searching for the part saying it was a joke, I realized they were serious. Have those calculations been done for the Sea Knight?



ANSWER: We concur, the USCG method of filling the boat with water is not a practical method. They do have a method to calculate the interior volume, but it is rather complex. A short method follows that is reasonably accurate for the purpose and on the conservative side. It assumes that the boat was built per the plans.

Plansheet 2 shows the sections of the hull in HALF SECTION.

• Strike a line parallel to the reference line at #0 (transom) sheer level. The square footage of the area below this line and inside the hull outline must be calculated at #0, #2, and #5. The drawings are to 1 inch = 1 foot scale.

- **The area can be figured by dividing these areas into geometric shapes (rectangles and triangles). The area must be in SQUARE FEET.**
- **The simplest way to do this is to use transparent graph paper with a 1/4" square grid. Each square in scale is 3" or 16 squares per square foot.**
- **Lay the graph paper over the section drawing and count the squares in each of the three sections.**
- **Figure the area of each of the three stations.**
- **Add them together and multiply by 2 (2 halves).**
- **Multiply by 5' - The result is in cu. ft total volume.**
- **Mutliply the cu. ft. by 64 (weight of water)**
- **The final answer is the weight required to sink the boat to the sheer level.**

We've taken some liberties on the conservative side as to where the sections are taken, but it's probably as accurate as filling the boat with water.

When the US Boating and Safety Act was first passed. We assumed we would be required to calculate these figures for each design. We contacted the USCG to ask how we should go about this and they asked if we built the boats... no, then you cannot make the calculations. Only the builder can certify the figures as the builder may not follow the plans.



design: PeeWee

1I. IS BIGGER BETTER?

We're sometimes mystified by large people—six-foot-plus and more than 250 pounds —who wish to build the smallest possible boat. Or the person who wants to build a boat to carry themselves, a passenger (both heavyweights), a dog, decoys, and probably several 12 packs, in a boat of about 10 feet—and be capable of being out in four foot seas. Then there is the prospective builder who wants to build a small hydroplane, carry a driver and an observer, and pull a skier. Ridiculous, but it's amazing what some people expect of a little boat.

When you contemplate building a small boat and you're sounding like any of the above examples, investigate. The beam and length of each boat is listed in our catalog. Use some string and outline the specified size on the living room carpet or similar area. Get seated in the outline. Simulate the gear and passengers that may be aboard. Be practical. Do you really want to be bouncing across the water in a boat this size? Remember too, this boat is not on that level, flat, stationary carpet. You must get into this craft that is going to heel, possibly severely, when you climb aboard and move about. Is the available space adequate for your needs?

Many would-be builders want to build a small boat and increase the horsepower we have listed. The power we give in most cases is conservative, but based on USCG requirements. See WebLetter 43. In addition, you may not be able to get insurance if the boat is overpowered. Again, be practical. A larger motor weighs more and, if carried to the extreme, can be downright dangerous. It's generally not the hull strength; a reasonable increase should not be structurally harmful. However, overpowering can cause capsizing or other dangerous handling conditions.

No, we're not suggesting you *must* build a larger boat. We're just saying *realize the limitations.* A slightly larger boat will not add appreciably to the cost. Time and difficulty in building changes little. In fact, a smaller boat usually has sharper bends, and springing the longitudinals may be more difficult.

We absolutely love small boats, and they have many advantages. The feeling of skimming over the water is exhilarating. Sailing alone in a small sailboat with a brisk breeze is a challenge and a joy. We like the light splash of the oars or paddles as we stroke across the water in a little boat in the early morning. And we love to show our small-boat transom to some guy in a big yacht that cos more than our house. When built and used for their purpose, small boats are arguably more fun than larger ones. Just keep your expectations—especially in terms of accommodations—realistic.

###



design: True Grit

1J. RANGE—HOW FAR CAN I GO ON A TANK?

Most boat owners with a powerboat of any size want to know how far they can go on a tank of fuel. Simple question? Yes and no. When all the information is available, calculations are simply made. But, there are a lot of variables that enter into the equation: speed desired, horsepower required to obtain that speed, fuel capacity and range desired. Any one of these factors can be calculated if the others are known. Let's go through the information required step by step.

What speed do you wish to travel? Probably the most economical one. Motor manufacturer's have charts that show the most economical RPM's their motor will operate at. The information will also furnish the horsepower the motor develops at that speed.

We have available speed charts on most designs above 20' that give the speed the boat will obtain with a given shaft horsepower. Note that's shaft horsepower, not maximum horsepower. A diesel engine has a constant and an intermittent rating. You need the constant figure; the output you can safely run the motor at all day. Gasoline motors can usually be figured to produce about 70 percent of their advertised horsepower. Again, the motor manufacturer should be able to supply the accurate figure for their motor.

Fuel capacity is easy, how much tankage is available for fuel.

You need to know how much fuel the motor being used will consume at the horsepower being used. Again, the manufacturer's chart would give this information, however, some rules of thumb can be substituted. A good two cycle outboard will use about one gallon of fuel for each 10 hp produced. An efficient four cycle will use about one gallon of fuel for each 13 hp used. The typical diesel, two or four cycle, will produce about 20 hp for each gallon of fuel used.

Let's use a diesel powered 55' trawler with an 840 gallon fuel tank as an example. The craft requires 150 SHP to attain a speed of 12 knots or (12 ÷ .87) 13.8 MPH or (12 ÷ .54) 22.2 kilometers per hour. The 150 SHP is divided by 20 to determine the fuel consumed per hour.

150 shp ÷ 20 = 7.5 gals per hour

The fuel capacity is divided by the gallons per hour consumed or 7.5 to obtain the number of hours we can run at the noted speed.

gallons of fuel carried ÷ gals /hour consumed = running hours

840 ÷ 7.5 = 112 running hours

The running hours multiplied by the speed will provide the distance that can be traveled or...

112 x 12 = 1344 knots range or divide by .87 to obtain miles:

1344 ÷ .87 = 1545 statute miles

Is that then the range of this craft? Absolutely not. The figure is theoretical and assumes no rough seas, winds, currents and going from point "A" to point "B" in a straight line. A minimum of 10% extra fuel has been suggested as a compensating factor, but this is not cast in stone. Remember, if you run out of fuel, you can't walk home.

The figures obtained will give an idea of the possibility of making an extended ocean going trip in a powerboat. Those of you who have an idea of gliding over the water at 25 mph to Hawaii or a voyage of similar distance isn't practical in the typical small boat. The weight of the fuel required may exceed that of the boat. Fuel is heavy; gasoline weighs about 6.2 lbs./gallon and diesel 7.1. The 940 gallons of diesel in the example above weighs almost 6000 lbs. not counting the tank weight.

###



design: Missile

1K. DO YOU REALLY WANT TO GO THAT FAST?

This text might make it seem like we are opposed to speed over the water. That's not true; we were weaned on three-point hydros and fast runabouts. Speed on the water is thrilling, exhilarating and fun, particularly in a small boat. The wind whistling past, the slap of the water on the hull, and an occasional dash of spray to magnify the feeling of speed. Sit smugly in your car at highway speeds, wrapped in a cocoon of metal and glass and the sensation of speed is virtually lost. Going 30 mph in a small boat feels more than double the sensation of being in an auto at 60 mph plus.

Yet, people tend to equate land speed to that over the water. Adding to the confusion, people exaggerate the speed their boat does. Many a "50 mph boat" won't push a speedometer beyond 30. And, if old Joe's boat will do 50, yours must go faster. Perhaps it's our competitive nature, but few like to be left in the wake.

But, let's get realistic; speed costs money. Let's cover only one factor—fuel consumption. The magazine pages of an "ultra" fast boat test yield some interesting figures. A 46' oversize speedboat will top 100 mph and "only" use 132 gallons per hour. Multiply 132 by the cost for a gallon of fuel in your area and you'll find what it will cost to run this beast at that speed for only one hour. Don't forget this is premium grade fuel, not the regular gas most put in their cars. Drop down to 53 mph and the fuel consumption lowers to 52 gallons per hour in this instance. Reduce the speed by roughly 50% and only about 40% of the fuel required with full throttle will be used. Incidentally this boat can be had for just under half a million bucks. Step up in the line to my left?

By the way, the above is a pleasure boat test. One hundred miles per hour over an uneven water surface is fun? More like, grit your teeth, hang on, and "What am I doing here?"

Getting more realistic, let's look at the figures for a 19' deluxe runabout. It tops out at 49 mph and uses 22 gallons of fuel per hour. Drop the speed to 33 mph and this craft will use 12 gallons of gas per hour. Still, the cost makes you think, doesn't it? Obviously many factors enter the speed of a boat. Weight being a major consideration. Also in a magazine test a 17' boat with fewer frills and less weight topped out at 40 mph while consuming 9 miles per gallon. When speed was decreased to 30 mph fuel consumption went down to 5 gallons per hour.

Fuel consumption at various rpm and thus horsepower is available from engine manufacturers. In our archives (source and accuracy unknown) there is a note that "a four cycle gasoline motor will use about one gallon of fuel for every 13 HP it produces". (Motor horsepower used divided by 13 = gallons of fuel required) Thus the fuel consumption for the powerboat you contemplate and the cost can be roughly estimated. Maybe a few extra mphs isn't worth it?

If cost is of primary importance and you will settle for 5-6 mph, consider an electric powered boat. Our 14' "Amp Eater" prototype would run about 7 hours on its batteries. Recharging the batteries takes about 6 hours; the cost in electricity, pennies.

So to you speed nuts (most powerboaters), enjoy the sweetness of pushing the throttle open... it's costing you, but isn't the fun priceless?

###



MONOHULL: Flying Saucer design


HYDROPLANE :Super Spartan



SEA SLED: Scrambler design

1L. HYDROPLANES, CATS, MONOHULLS AND SUCH

There are many types of boat hull configurations and although this text deals with powerboats some of the nomenclature would also apply to sailboats. The following hull types have been selected since they represent the most common types: monohulls, hydroplanes, stepped hulls, three points, catamarans, tunnel hulls, and hydrofoils.

MONOHULLS

A monohull has one supporting surface and is common to most powerboats. The single planing area may be completely flat, vee'd, arced, or round in cross section. In addition, a hull can be classed as one with a soft or round chine (junction of the bottom and sides), or as a hard chine where the bottom/side join in an abrupt corner. As viewed in profile the hull lines may be severely arced or relatively straight, particularly aft.

Straight running lines aft, parallel, or almost so to the waterline, are intended for planingspeeds. A planing hull skims over the water with the hull more or less above the water surface. A hull that goes through the water is classed as displacement... it pushes through the water, rather than on it as with the planing hull. Obviously there are categories inbetween such as semi displacement, semi planing, etc. A flat bottom boat (with no vee in section, at the transom) is faster but the ride is rough, to put it mildly. Deep vee bottoms, usually considered to have about a 20 degree vee or more, came into popularity a few years back but do require more power. In smaller boats they also have a tendency to tilt severely to one side; called chine walking. In addition the small deep vee boat at slow speeds or at rest tends to list from side to side as the passengers move about. Boat bottoms are compromises that veer toward one performance characteristic or another, through an infinite range from a flat bottom to deep vee.

HYDROPLANE

A boat that planes or skims on top of the water surface is classed as a hydroplane and may be a monohull, or multiplaned such as three point and stepped hulls. Some designers include catamarans and tunnel hulls in this category. A hydroplane is intended for speed and does not work well at displacement speeds. Since speed is a function of weight, best performance will be obtained with lightweight hull construction and minimal passenger loading. When powerboats were in their infancy, planning the hulls was virtually out of the question as the available engines were extremely heavy and produced low horsepower. Thus the boats were long and narrow to go thru the water easily.

When lightweight and more powerful motors became available the hulls were widened and shortened to take advantage of the ability to plane.

THREE POINTS

In common usage, the word "hydroplane" usually refers to a three-point. A three point hydroplane has two planing surfaces forward and one aft. The forward points (sponsons) are lower than, and are outboard, of the main hull. The third point is the aft end of the boat bottom and is generally flat. However, at high speed the third point is virtually free of the water, the boat is riding on the prop. Three points have been built with one point forward and two aft but have not been successful to the best of our knowledge. The common three point was as we know it was developed or perhaps better described as popularized about sixty years ago. Today they hold most major speed records for straightaway and circle racing. They have also become increasingly dangerous as they are pushed to higher and higher speeds. The hulls are almost free from the water and the air rushing between thru the forward sponsons creates considerable unstable lift. These hulls are not intended for offshore or rough water conditions they are primarily racing craft.

However, GLEN-L has several smaller three points for the young at heart. Again, as with all hydros, weight is important. Heavily loaded, so that the aft end cannot lift out of the water, they are not that fast. It is possible to compensate for heavier driver weights in small outboard models by adding a hydofoil to the motor.

STEPPED HULL

Steps are transverse breaks in the bottom plane, straight or fan shaped. They create a clean break in the planing surface for reduced skin friction. Like a transom, a step ends a planing surface and the theory is to cause the water to miss contact with forward portion of the following plane. Substantial reduction in wetted surface under relatively smooth water conditions can thus be achieved. There must be a clean break of the water as it leaves the step; with air behind it. If not the step will create drag and even suction.

Various numbers of steps have been used over the years but their current use is not common. Stepped hulls in general, have a poor reputation in rough water. Stepped hulls generally run very flat but many, particularly with a single step tend to porpoise, although a mild porpoise usually increases speed.

CATAMARANS

The word catamaran itself is unusual, as every other letter is an "a". The word is derived from the Polynesian words "kattu" (to tie) and "maran" (tree). The earliest form was a logical evolution from available materials to provide a stable platform.

The modern catamaran, mostly referred to as a "cat", has twin hulls for planing, sideby side, separated by a tunnel or open area. The original Polynesian hulls were symmetrical, in section and were not power boats. Modern power cats have become assymetrical in most cases. A cat powerboat is a wide stable platform at rest or underway. It turns well, but flat, as opposed to the bank common to vee bottom craft. They are very soft riding in a chop, however, in conditions where the seas can strike the flat area of the tunnel, pounding will occur. Cats are preferably powered with twin motors, one on each hull. Various pods, third hulls, and other appendages have been developed to make single motors more efficient, but they still work better with twin motors. Like deep vees, cats have more draft than flat bottom hulls.

TUNNEL HULLS

A tunnel hull could be designated as a cat, but there is a notable difference. A tunnel hull is similar to a single hull split down the longitudinal centerline and spread apart by a tunnel. The hulls are asymmetrical; the inside surfaces of the tunnels are straight longitudinally and typically vertical. These are primarily fast boats and are commonly used for offshore racing with a rather high tunnel so the rougher seas make less contact with water. These hulls are best for twin motors but have been developed to work well with a single motor with adjustable prop height. The water/air mixture rushing thru the tunnel creates considerable lift and higher speeds in windy conditions can be dangerous. Again although thought of as race boats GLEN-l has developed small tunnel hulls for fast, safe, enjoyment on protected waters. The turns are flat as opposed to banking but relatively sharp with the hulls seemingly glued to the water. Fun boats!

Note: There is another type of hull that is often called a tunnel hull. These are usually slower hulls, more properly called "tunnel stern" hulls. These hulls have a fore/aft depression or "scoop" in the bottom for the prop. These may be in various configurations, and are meant to allow the hull to run in shallow water.

SEA SLED

The inverted vee bottomed Sea Sled was developed and patented by Albert Hickman more than 50 years ago. The forward section of the hull looks much like a "W" with the center vee section going to a flat plane at the transom. High claims were made for these boats and though many were justified, it was considered a poor sea boat. The boat's appearance was unusual and combined with the closely held patent, the number built was minimal. The comments made are primarily for historical information as few have been built in recent years.

HYDROFOILS

Hydrofoils are external appendages that support the hull (type may vary) above the water. As with a three-point, the idea is to decrease wetted surface and in theory should be capable of the fastest speeds. The struts, located fore and aft, have fins

attached to lift the hull clear of the water as speed increases. The fins are similar to an airplane foil section but modified for water, parallel or slightly canted to the longitudinal waterline.

The hull lifts free of the water as speed is increased, and settles into the water as speed is decreased to operate like a conventional boat. These are novelty boats, there have been some that operate successfully, but the moving parts, the vulnerability of the appendages, critical foil shape and angularity, make them impractical for the average builder or boater.

So what's the next advancement in hull design? Sorry, but we don't have a crystal ball. However, be assured it probably won't really be new. Over the generations boatbuilders and designers have added many different appendages to their hull designs. With advertising copy that described their "new" hull as "revolutionary", "a breakthrough", "exclusive design pat pending", "the superior boat of all times has finally arrived". Eureka it's here? Probably not, more likely a revision or modification of an old idea taken out of mothballs, often incorporated more with an eye to marketing than performance. And the advertising copy for this revolutionary innovation... it was most likely written by someone who didn't know his port from his starboard.

###

1M. SELF DRAINING COCKPITS

Let's set the record straight. Almost everyone would like to have a boat with a cockpit that would drain any rainwater or spray back to the ocean or lake the boat is floating in. Why aren't ALL boats made with such a feature? Let's analyze the subject.

A self-draining cockpit must be above the waterline or water would come in the cockpit, not flow out through the scuppers (cockpit drains). How much above the waterline? Obviously, the higher the cockpit level above the water the better for drainage, but in a 14-16' boat the hull depth limits the cockpit level. Way back in memory a figure

of 9" above the waterline for a self-draining cockpit was desirable for a boat in the 20' range. Obviously, any figure must take in account the size and shape of the boat. Let's get a few facts.

A boat has a CB (center of buoyancy) that is essentially the same as the pivot point on a balanced teeter-totter. Moving a weight forward or aft of the CB make the boat go down by the bow or stern respectively. Architects use a PPI (pounds per inch immersion) to calculate out of trim. A 20' boat may have a PPI (it'll vary with the boat) of 250 lb. ft. If a 200 lb. passenger moves 1.25' aft of the CB the boat would go down by the stern 1" when at rest. Suppose our 200 lb. passenger goes to the transom, 8' aft the CB, to pull up the outboard motor. That will bring the stern down more than 6" (200 x 8 divided by 250= 6.4") further in the water. Then his buddy comes back to help him; well, you get the idea any self-draining cockpit level must be quite high above the waterline or water will come into the cockpit through the scuppers.

So what, if a cockpit level is only 4" above the water, the passengers feet may get wet feet but the water will flow back out when they come forward. Very true, but the water in the cockpit weighs more than 60 lbs. per cubic foot and the boat could go down by the stern even more as long as the guys remain in place. Perhaps the example is a little extreme, but the idea is to illustrate that a small boat cannot have a practical self-draining cockpit.

Water can be prevented from flowing back into the cockpit by crossing the drains. The port drain exits on the starboard side and vice versa; a method common on sailboats that heel. Check valves can also be used at drains. These allow water to flow out but not in. However, they can malfunction if debris gets in the valve. Of course, a typical small planing boat at speed is not that critical to passenger movement. In addition, the static waterline is not the same as the craft when planing and water backing up in the cockpit through scuppers would not occur.

Consider the above factors, the pros and cons, prior to insisting that the boat you build must have a self-draining cockpit.

###

1N. COLD-MOLDED HISTORY

Many feel that building a boat by the cold-molded method is new and revolutionary. The cold-molding process as used in this dissertation is using thin multiple laminations of relatively narrow (about 6") wood or plywood, bent over a form and progressively glued together. The laminations generally cross one another at oblique angles with a minimum of two or more layers. The process lends itself especially to round bilge boats so the laminations can extend from keel to sheer without a seam. However, the use of cold-molding on vee bottom boats with a reinforcing chine is also widely used.

The cold-molded method is essentially making plywood over a form with the advantage that some compound curves can be introduced. It also provides a smooth, leak proof, monocoque structure that is incredibly strong for its weight. The possibility of leaking between seams is virtually eliminated as each junction is backed with another laminate.

When and who first started building cold-molded boats is unknown. During WW II the method was used on PT boats, and many were built. During this same era the British built the cold-mold process de Havilland "Mosquito" twin engine bomber. And the famous "Spruce Goose" was built by Hughes Aircraft under the leadership of Howard Hughes by the cold-mold method. True, the amphibious airplane only flew once

for a short distance, but the structure remains solid. About the mid-forties, many cold molded hulls were commercially produced. The process was somewhat involved and tooling costs were high. This was not for the "mom and pop" boatyard.



design: Tahoe 24

The typical cold-molded hull was usually under 20' to cover the more popular range. Typically five to seven laminations of 1/16" mahogany or spruce veneers in 3" to 6" widths were used. These strips were coated with phenolic resin type glue and allowed to dry. The strips were applied over a mandrel the shape of the boat and stapled in place. The structure was then placed in an airtight bag and a vacuum applied to force the laminations together; then rolled into a large oven or autoclave and baked under high steam and heat to cure the adhesive. The hull was then removed and the exterior staples removed and a filler forced into seams to cover minor imperfections. The formed hull was then placed in a fixture to keep it in alignment while the transom and other members were installed. Interior reinforcement was minimal and the interior clear of any obstructions; quite unusual for the time.

Due to the tooling cost, U S Molded Shapes, Inc. and a few others produced stock hulls to 20' and sold them to other companies to finish out and market.

Early in the fifties these boats were available, on a limited scale, to the home builder to finish. Mass production of this type of construction virtually ended with the advent of fiberglass boats. However, the durability of these hulls was never questioned and many are still in use today.

Cold-mold construction of a somewhat different type was used to build the popular mahogany runabouts such as Chris Craft, Century, Hacker, and others. These boats, when planked with solid planks with batten seam construction, leaked until they were in the water long enough to swell the seams. Transporting the boat to varying locations was a chore as the boats dried out while on the trailer and might take a day or so after launching to become watertight. The glues of the day were not actual adhesives; they were more of a caulking mastic and could be pulled apart with little effort. In an effort to solve the problem and possibly to make the final longitudinal planking thinner and easier to bend, the bottoms were diagonal planked followed with the typical longitudinal planks. The boats still leaked. Some tried canvas between the lamination, but after a time the canvas deteriorated and the old problem still existed.

Today most of the runabout mahogany boats built use a diagonal underlayment, but with at least two laminations, typically plywood, followed by thinner longitudinal solid wood planks. Plywood has been used for the final planks of these runabouts, but the outer veneer is very thin and the general appearance is not as a pealing. These hulls don't leak due primarily to the epoxy adhesive, usually with thickeners used between the laminations. Encapsulation of each piece and final epoxy coating has eliminated most of the older problems.

Building cold-molded round bilge boats as were manufactured yesteryear has been modified; expensive mandrels, air bags and autoclaves are eliminated and building a single boat is practical. The diagonal laminations are bent over a hull framework to provide the hull shape and progressively stapled in place with thickened epoxy between each lamination. Epoxy with thickeners fills minor voids and still maintains structural integrity. It's a simple way to build and is thought by most to be easier to do but requires more time. The vacuum airbag is often used to assure a positive bond between the laminations.

As is often the case, the old timers had the right idea. The problem was that the adhesives of the day were complex and costly to use. Epoxy adhesives and modern methods have popularized cold-molding, which is now thought of as a new procedure by many builders.

If you are considering building a boat, consider the cold-molding method. It's not the total answer for many boats, but well worth considering for many.

###

SECTION

02 BUILDING & SKILLS

TIPS, TECHNIQUES AND TRICKS OF THE TRADE



design: Belle Isle

2A. CONVENTIONAL PLYWOOD OR STITCH AND GLUE CONSTRUCTION?

Plywood boats are commonly built by two methods, conventional and Stitch and Glue. Conventional plywood boatbuilding has been used since plywood became practical for boat use. It's a modification of the methods used for the old conventional planked boats that seem to last forever. Stitch and Glue, although most think it is new, has been around quite some time. Its popularity, however, really took hold when the marine epoxies were developed. Both conventional and Stitch and Glue building methods are reviewed under the listings Boatbuilding Methods on the GLEN-L website.

What's the best method? It depends on the type of boat, not all boats are practical for Stitch and Glue (S&G) construction; the method is impractical for hulls designed for cold-mold or diagonal plywood strips. Our plans utilize S&G methods for many small boats using sheet plywood. The contours of the planking are given, so you don't need to determine the shape from marking it out from a framed boat as would be required for conventional building. S&G eliminates fairing, a task that most builders find confusing, though, after a little experience it isn't really much of a problem. S&G is popular with first time builders as a boat is formed very quickly after the parts are cut out. This boosts confidence and stimulates the itch to do more. Some don't like the fact that applying the epoxies and taping seams is a smelly, messy project; and epoxies can be toxic for some. Although epoxies are currently used on S&G and conventional plywood boatbuilding glue bonding, it's not as extensive as the glue, fillets, and fiberglass reinforcements of S&G boats.

Cost to build is predominate in most builders minds. At first glance, S&G seems to be more expensive and it possibly is, by a little. Many check the GLEN-L "Stitch and Glue Kits", see the price and blanche. But such a kit provides the fastenings and bolts, the "FASTENING KIT" used on conventional construction plus any bolts required. Also included is epoxy to use as a coating, with or without additives (furnished) for gluing or forming fillets; you can even make

fillers for patching screw holes or other minor imperfections. Fiberglass laminates to bond the seams and copper wire to "stitch" the seam together, even the tools for application, rollers, squeegee, and brushes are included. S&G eliminates much of the solid wood, frames and longitudinals typical of conventional methods. Even the stem, the long curved wooden section at the bow, is eliminated in most GLEN-L S&G plans. Subtract the items not needed in S&G and the costs to build come quite close. It is possible to take shortcuts on conventionally built boats that are not desirable for S&G methods. Glues can be substituted for epoxy and encapsulation can be eliminated. Cheaper fasteners used and fiberglassing eliminated or polyester resin used. On smaller "throw away" boats, this may be satisfactory but in the long run comparing the two methods on equal terms is the only fair way.

Durability? Either conventional or S&G methods have excellent life, particularly when epoxy encapsulated. Keep the bilge dry and free from collected rainwater and most of the possible problems are eliminated.

###

2B. ABOUT PLYWOOD

LONG SHEETS

Long sheets are frequently called out in our plans and in plans from other designers. While they may be nice to use, they aren't required. On our test models we use standard 4'x8' sheets, joined using one of the methods detailed below. Both methods have proven to be as strong, or stronger, than the plywood being joined.

BUTT JOINTS

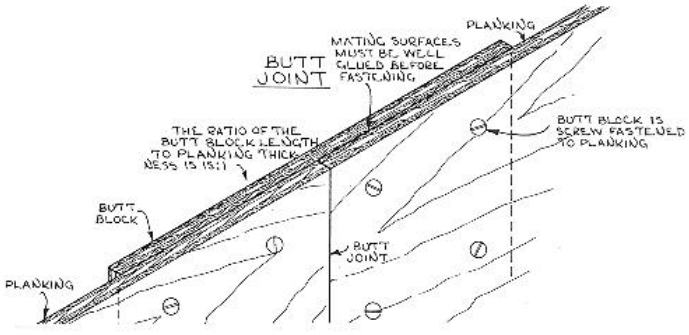

Butt joints are usually detailed in our plans, but basically consist of butting panels of plywood backed up with a butt block of the same thickness (minimum) as the plywood planking, extending 4" or more on each side of the joint. Butt joints can be glued without fasteners, but only if epoxy adhesives are used. Fastenings, when used, should be spaced about 2" apart and 1" from edges. When butt joining 1/4" panels with 1/4" butt blocks, screws that will not project through the opposite side have little holding power. Usually 3/4" bronze screws are used and the points projecting on the butt block side are ground flush. It is best that the screws penetrate fully, through both planking and butt block, regardless of their combined thickness. Butt joints tend to flatten the joined area, so care must be taken to join in the flattest section of the boat possible. Usual practice is to fit one planking panel to the boat, fasten in place, and then fit the butt blocks BETWEEN the longitudinals such as battens, keel, chine or sheer. Follow with the joining panel. If epoxy adhesives are used without fasteners, it is preferable to rough cut the joining panels and pre-join them on a flat surface so proper bonding pressure can be applied, either by weights or temporary fasteners.

SCARF JOINTS

The scarf joint shown is at a ratio of 1:12 but some use a 1:10 ratio up to 1/2" and 1:8 for thicker plywood. The scarf joint length is found by multiplying the thickness of the plywood being joined by the ratio. As an example, at a 1:12 ratio, 1/4" thick plywood would have a scarf joint length of 3". Always cut the plywood panels to the minimum width as wide panels are more difficult to join. As shown in the sketch, the two plywood panels to be scarf-joined are aligned on the edge of a flat table or a sheet of 3/4" plywood. The upper panel is set back from the lower panel the distance of the scarf joint. Align the edges of the two plywood panels to be joined, the table

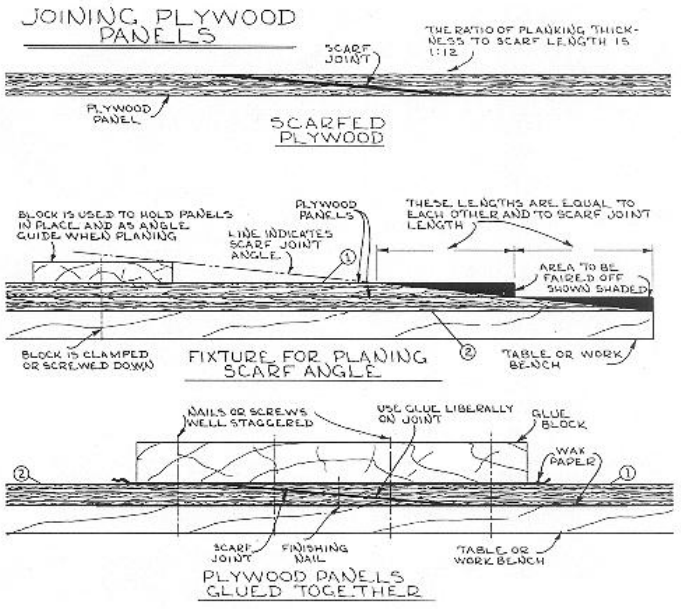

or work surface, and the clamping block, so they are precisely parallel. Clamp, nail, or screw the block through both panels to the table or work surface. Both plywood panels are tapered simultaneously with a hand or power plane, or a disc sander for preliminary rough cutting. The panels are finished to a

smooth surface with a long base joiner or smooth plane, or use extensions clamped to the side of the plane if the base is not long enough to extend from the block to the table edge and provide planing movement. Boatbuilding epoxy (RAKA or System Three brands, for example) is the preferred adhesive because of its gap filling properties. Remove the panels from the fixture and give both surfaces a liberal coat of glue. (Pre-coating the mating surfaces when using epoxy products is advised). Place plastic film between the work surfaces to prevent them from being glued to the joining plywood panels and use finishing nails, driven through the scarf joint into the table, to prevent slipping. Screw or nail the blocking clamp over the joint with enough temporary fasteners to provide solid, even pressure until the glue sets. Avoid excessive pressure that forces much of the glue out. The holes caused by temporary fasteners can be filled with a hard-setting putty.

###

Q.

I CAN'T GET MAHOGANY, WHITE OAK OR SPRUCE; CAN I USE POPLAR?

Boats have successfully been built using all sorts of woods that are not recommended for boat building. But when we're asked to recommend a wood or alternative wood, we pick from a standard list. In our plans, we don't generally list longleaf yellow pine as an option, because it's not available in many places. It fact, it *is* a good option and is frequently used as an alternative to white oak. Like Douglas-fir, there are caveats about yellow pine. Both woods, in the areas where they are common, are used for home construction. Construction grades are not acceptable for boat construction, both from a quality standpoint and because they are not properly dried. Yellow pine is also a generic term which encompasses a variety of woods. The experts recommend "long-leaf" and some specify "old growth." "Straight grain" is specified for many types of wood, particularly Douglas-fir, because it is dimensionally more stable and has better strength characteristics.

Before this century, when wooden boatbuilding (like many crafts) was an art, boat builders would take great care in selecting their lumber. Today, in a world of consolidation of suppliers and rushed life styles, many home boat builders contact us to ask if they can use woods that really aren't suitable for the wet environment in which boats spend much of their life. In many cases, the caller went to their local building supply store and found that specialty woods were not available. The woods may have been available in lumberyards or from local specialty suppliers, but they had not taken the time to look.

"Can I use red oak instead of white oak?" Red oak is not as rot resistant as white oak and is not recommended... can it be used? As Allyn (our shop foreman) is fond of saying, "It ain't my boat." We can give recommendations, but it is up to the builder to decide what to use.

Which non-marine woods could be substituted depends on how the boat will be used. You always want wood that is properly dried, free of knots or other structural defects, but what if this is a duck boat you keep in the garage and only take out a couple of weeks a year? If it is well painted, do you really have to worry about rot? Probably not. Clear red oak would be an option, albeit heavy, for a boat you might have to carry any distance.



Western pines tend to be relatively weak and prone to rot. If you are building a small rowboat that you use as a coffee table, pine would be fine. If it's kept inside and only taken out occasionally... how about used frequently, but stored dry in a garage.., how about stored under a cover in the back yard? When you build a boat and you know how it is built and what its limitations are, then you will presumably treat it accordingly. But if you give it to someone else who hasn't decided in advance the limitation he would accept, your pine boat may be very short lived.

We have added a new section to our website, "Wood & Plywood" pages in which we have reproduced Chapter 5 from our book Boatbuilding with Plywood. This chapter discusses woods used in boat building. We hope to add additional features to this section concerning various types of wood that we have been asked about, listing information to help a potential boat builder decide what wood to use. Maybe in the future we will be able to tell anyone who asks about poplar why it is not listed as a desireable wood for boat building.

###

2C. BILLS OF MATERIALS & LAMINATING SCHEDULES

In our description of what a GLEN-L plan and pattern set consists of, the terms "Fastening Schedule" and "Laminate Schedule" are often used. Perhaps we originated these but we're not sure, not much is new in boating. In any case, we popularized the methods of listing the fastenings required to build and the use of laminates at seams for stitch-n-glue boats.

A fastening schedule lists in tabular form what type, size, and the spacing or number of fastenings to use at each junction in the boat. The proper type for each particular joint, the length, diameter, and gauge of fastening to use is specified. For example, junctions may require bolting, screw fastenings, or nails. We also always stipulate that each permanent junction of wood members should be glued; epoxy is currently our first choice.

As an example, bolts are specified by type, diameter, and length. Mostly carriage bolts are used for wood to wood junctions. Screws would be specified as wood type round, oval, or flat head, with flat head the most common. The overall length is specified as well as the gauge (diameter). Nails used are mostly the ring type common to boatbuilding and specified by length and gauge.

The type of material used for fastening is also specified, generally hot dipped galvanized or bronze. Although other materials such as brass or "Monel" are available, we don't list them as an option; the brass are weak and deteriorate rapidly in salt or brackish water, and while Monel or similar metals are excellent the cost is high. We might add that the term "stainless steel" encompasses a wide range of metals, many stainless steel alloys will rust, and most are subject to crevice corrosion. We seldom specify these alloys, as the proper ones are expensive and suppliers are too frequently selling the inferior type for marine fasteners.

As a cost saving, particularly on smaller boats, galvanized fasteners are listed. This is NOT the common bright finish electroplate found in the local hardware or building emporiums; these are not acceptable. Galvanized refers to the hot-dipped type where the screws are submerged in a vat or molten galvanizing metals. The hot dipped surface is dull gray after exposure to the elements.

This does result in a fastener that may have some burrs or clogged threads; the price paid for a cheaper fastener. It's preferable to not mix fasteners; bronze and galvanized, for example, although with trailerable boats that don't remain in the water, particularly in fresh water, the inter mix doesn't cause a problem.

Each junction of two wooden members is listed with the proper size and also the number or spacing of fasteners required. In practice, more or less fasteners may be needed and a shorter or longer one more adaptable. However, through the years of building many boats, our calculations have proven accurate.

The number of fasteners required for each size and type is then tabulated, with a reasonable safety factor included. This is done with the designers and shop people going over each junction and checking the sizes, spacing and fastener totals.

The result is a complete listing of the type, size, and total number of fasteners required to build the hull, all in tabular form, resulting in the "Fastening Schedule".

Stitch-n-glue and some other plywood boats require laminations of resin impregnated fiberglass material for seam and other junctions. The "Laminate Schedule" lists the size of the fillet (epoxy resin with thickeners added) to make a cove at inner junctions, which varies with each. The type of fiberglass laminate used at the junction is listed; fiberglass cloth, mat (seldom used), bi-axial or similar material of various types and weights depending on the design requirements. Widths and number of laminations are also listed.

Again the totals of resin, hardener, additive fillers, and widths and lengths of fiberglass material required are totaled and noted. No need to search the plans or fine print, everything you need is listed in the Laminate Schedule. This reminds me of the remarks of a mentor of days gone by about a boat I had recently designed. I was very proud of the fact that many details were given, as the boat was intended to be built by average DIY boatbuilders. He dressed me down with the comment: "Never furnish Bills of Materials and other listings. If a guy can't figure it out himself, he shouldn't be building a boat." I think he was wrong. And, with other designers adapting our procedures and the acceptance by customers of our methods, it doesn't appear there is much doubt. It's a lot of extra work, but this is the right way to do it, and what you get with GLEN-L plans. ###



2D. SETTING UP - THE FOUNDATION FOR BUILDING A BOAT

A boat, unlike a house or garage, does not have flat areas such as a level foundation with vertical uprights (studs), etc.. A boat is curved from most any direction you view it. An artificial foundation must be created. We've developed a method of using a "building form" to substitute for the "foundation" in the analogy with housing construction. This type of building form is used on conventional boatbuilding, wood, metal, or fiberglass but is not required for stitch-n-glue boatbuilding.

The conventionally built plywood boat is built around a series of sectional members called frames or bulkheads. We furnish patterns to make your own. Our system utilizes an athwartship horizontal reference line across each frame. On most small boats this is the inside surface of the bottom frame member. However, it may be a horizontal cross member at most any selected height on the frame. The frame centerline is perpendicular to this horizontal reference line that we call the "set up level". The set up level is also parallel to the waterline thus forming a horizontal plane level both lengthwise and athwartship through the boat.

If the frames or forms are aligned vertically at 90 degrees to the set up level, horizontally level about this plane, and centered along a longitudinal centerline the variances in the curved boat shape are automatically developed. These frames and other hull framework members are supported by the building form. This is simply a method of supporting the frames and other members such as stem and transom accurately at the set up level. Several types of forms can be used but generally we prefer one developed over the years that has proven simple and accurate. The frames and other members are supported by two longitudinal members (set up members) that are level both lengthwise and athwartship, at a convenient working height, and spaced a width compatible with that of the frames. These longitudinal members are supported to the ground or working areas by upright legs.

The longitudinal set up members may remain as part of the boat. Often they are used as longitudinal supports for floors, cabinetry, etc. If the boat is inboard powered, the set up members double as motor stringers to support the weight and spread it through the structure. Set up members on smaller boats and those outboard powered are used only to build the boat and are not a part of the finished boat.

It is not necessary that the ground or floor is level; only that the set up members be level in both directions. Obviously you don't want to work on the side of a hill but a level surface is not necessary. In days gone by, the typical beginning of construction started with building a level floor to build the boat on. Great idea but expensive and not required with the method we have developed.

The upright legs supporting the set up members may be posts buried in the ground if working on a dirt area. Some will have the advantage of building on a paved area, however, it's doubtful if you want to bust it up and put in posts. To overcome this we use a horizontal base member anchored to the ground with expansion bolts. This base member is used with cross members to support the legs.

Most of our plans detail, dimension, and give instructions for a building form specifically for the boat being built and even

list the sizes and materials required. But, the building wood sizes or type is not critical and any scrap lumber can usually be substituted.

The frames and other parts that form the hull structure must be rigid. Longitudinals will be bent around this framework that will require shoving, pulling, etc.; the structure must not move or the hull shape may be distorted. Fasten the frames securely to the set up members. Upright blocks from the set up members fastened to the frames with screws, bolts, double-headed nails, or clamps will do the job. Or use an athwartship cleat atop the set up members and fastened to the frame or cleat on the frame set up level, fastened by any method listed above. Remember, however, the fasteners will be removed to lift the boat from the building form. Don't position fasteners in such a manner that they are inaccessible and cannot be removed easily.

Brace the framework with cross braces between frames or block the frames to the floor. Perhaps a ceiling or wall is available for anchoring the bracing to the framework. Usually some of the braces can be removed just before planking the hull. Better to have more bracing than not enough. A well built building form, with accurate frame members properly centered, leveled, and securely held in place, will provide the sound foundation for the construction of the balance. Spend a little time to make it correctly and time spent fixing goofs will be virtually eliminated.

###

2E. SETTING UP - THE BUILDING FORM

Consider the building form used to build a small boat as being similar to the foundation of a building. If the foundation for a building is out of kilter or not level, problems occur. If the building form used to build a boat is flimsy or out of alignment, problems are compounded.

A building form to support the frames, stem and transom during construction is required on most framed boats. Without some sort of "reference plane" these pieces could not be practically built into a boat. We call this reference plane the "set-up level" and all GLEN-L plans and patterns using framed construction indicate this set-up level. Our plans detail a wooden building form for the design being built with full dimensions and material sizes.

In the boatbuilding shop of yesteryear the approved method was to build a flat, level, wooden floor and erect a form on it, all vertical and level to the nice working surface. Wonderful, expensive, lots of work, and not necessary. The most common building form we've developed utilizes two parallel, horizontal, straight 2" "set-up members", supported to the floor or ground with legs.

The support legs for the set-up members do not require a flat floor or base. The set-up members must be level but the working area need not be flat. If working on a dirt area posts (legs) may be buried in the ground to support the set-up members. Legs can rest on a concrete floor but must be anchored some way to prevent movement. The building form must be strong and secured in position as you will be pushing, pulling, and pounding every which-way and the framework must not move. If your foundation moves, frames can be thrown out of alignment, the sure basis for future trouble.

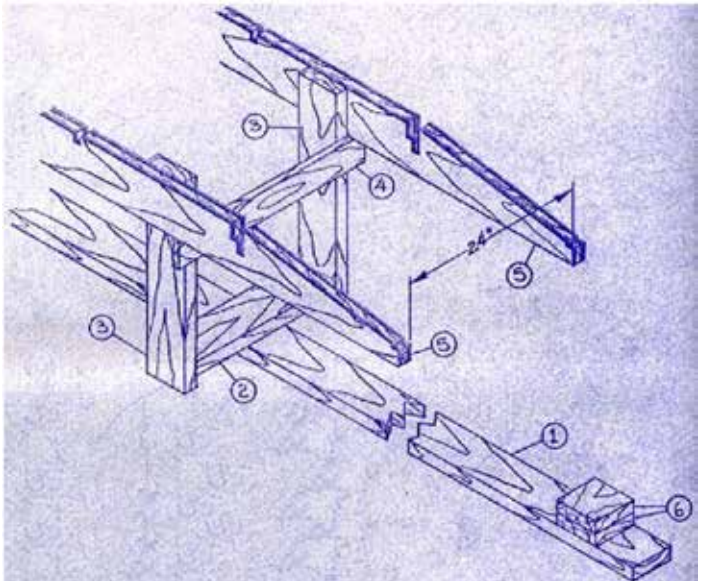

The drawing shows a typical building form. The various parts of the building form are numbered and are referenced in the following text. The #1 base is anchored to the concrete floor with expansion bolts at each end. The #2 spreaders are fastened to the base and #3 upright legs resting on the floor are attached to the spreaders. The #5 set-up members may be temporary or in the case of inboard powered boat permanent motor stringers. The set-up members are clamped to the legs parallel and level in both directions, then fastened in place supported by #4 athwartship cleats. Additional diagonal braces or supports may be required, just be sure the structure is rigid.

We like to use a chalk line or wire along the centerline just below the set-up members to center the frames and align the stem. Left in place it's a ready reference to check frame alignment.

The frames are mounted on the building form set-up members, spaced per the plans, centered, and vertical. Athwartship cleats atop the set-up members, sided to the frames, can be used to fasten the frames to the set-up members if required.



The tip of the stem is referenced from the set-up level, aligned on the centerline and blocked to the base member. Each framework member is then blocked to the form or to one another to prevent movement; all must be aligned and held in place during the entire construction process.

Don't forget that the frames and other members must be removed from the building form. Use screws, bolts or double headed nails readily accessible for removal. After the boat is planked we prefer to turn the boat right side up with the building form still fastened to the boat, and right the entire works. Level the boat while resting on forms. Block securely in place and then remove the form.

Sounds as if making a building form is a lot of work? Not really, if you consider all the time saved by making a strong accurate structure. If you make the building form/foundation strong and true, the boat will go together easier and in less time.

###

2F. SHEET PLYWOOD DEVELOPMENT

Any boat built with sheet material for planking, plywood, metal or plastic, must be "developable". To be developable it must be either flat or curved to the surface of a cylinder or cone; most often that of a cone. The terms conendric development and developed for a specific sheet material such as plywood are used to describe a hull that can practically be built from sheet material.

Such a surface will either be straight or convex in section. It cannot be compound to form a flare or concave surface although a developed sheet plywood boat may appear to have somewhat concave sections as viewed from different angles. It is also possible to compound the panel endings, in some cases, to introduce a minimal convexity. But a generous flare cannot be made on sheet plywood. Metal can be heated, bumped or formed to introduce compounds but is not a surface that will accommodate sheet plywood.

Make a simple practical test to illustrate a developable surface. Take a sheet of paper and form it into a cylinder and then a cone. Any strip through either is developed and could be covered with a sheet material without buckling. To illustrate what happens when a compound is introduced, lay the sheet of paper on a table with one edge weighted to the table with a ruler. Bend up one corner and the paper will form a nice smooth developed surface. Now attempt to put a concavity on the underside of the raised corner. The paper kinks, would not take sheet material, and is not developable.

The design of a boat to accommodate sheet material can be rather complex without the use of computers. Initially, the development method used required a point or points with radians emanating and forming segments of a cone or cylinder. The method worked, but attempting to get a desirable boat shape was difficult. Worn out erasers were commonplace. Other methods were introduced and the development was simplified, but it's still a tedious process. And, from practical experience, we've found that a little tug or shift when building the boat can cause variations, usually minor, from the developed surface. The developed surface makes one that can be formed with sheet material. It does not prove that the material being used CAN be bent to that surface. A nice developed surface may be impossible to bend into shape if the material is too thick; then multiple layers may be required.

A stitch and glue boat is an excellent example of one with developed surfaces. The sides and bottom are joined along the chine, stem/centerline, and stern and the sheet material bends naturally in shape. Of course the side and bottom shapes need to be developed by calculations, model or mockup. However, the building method doesn't try to force the plywood into a compound shape. The method does lead to some interesting possibilities on models or prototypes on what can be done on the panel endings and how much compounding is practical; not much in most cases.

GLEN-L does have boats built from plywood that have compound surfaces. There is a distinction as these boats may be built from plywood but NOT sheet plywood. Construction is cold mold using layers of relatively narrow strips of plywood running diagonally across the boat. These do form a compound surface and some areas (typically aft on planking boats) may be large panels covering a developable surface or with minor compounds.

The term "developed for" (steel, plywood, or aluminum) describes a surface that sheet material can be bent around smoothly without buckling and does not have compound curves. Don't attempt to alter the exterior contour of frames or other sectional members of a sheet plywood boat. If a compound surface is introduced, sheet planking will be impossible or at best impractical to force in place.

HOW TO USE PATTERNS

When you purchase a set of GLEN-L plans, you receive patterns for various members as noted on the particular boat descriptive literature. These patterns usually consist of the exterior contour, often in half section, of the frames or sections, transom, and full templates of items such as the stem, knees, centerboard trunks or other pertinent structural members.

These must be duplicated in wood, steel, aluminum or forms for fiberglass depending on the material the particular design is constructed of. Boats built by the Stitch and Glue method often furnish patterns for the planking and most contoured parts in the boat.

Complete instructions are given on how best to use the patterns, but people oftenoverlook or fail to review them adequately. There are several methods to duplicate the patterns to the material. The paper patterns can be laid over the material and a punch or awl used at frequent intervals along the lines to be duplicated. A dressmakers wheel, a round wheel with "teeth", works well on wood. We prefer carbon or transfer paper. Most are familiar with the old carbon paper used in offices but it's only standard paper size and lots of sheets are required. GLEN-L has recently made available transfer paper, in large 2' x 16' sheets that readily covers large areas in one piece.

Patterns are frequently given in half section and a mirror image or opposite side is required. This is easily done with the transfer paper. Lay the half section pattern to be duplicated over the material used with duplicating side of transfer paper on the material and another duplicating side up to the paper pattern. Use a pencil and trace the contour.

The line will be transferred to the material and the part mirror duplicated to the underside of the paper pattern simultaneously and both halves will be identical. The hole punching method will give the same results but the transfer paper is easier and gives a solid positive line on the material being duplicated.

Many segments of patterns are straight lines. There is no need to duplicate these the full length of the line; mark the endings only, we use a well defined "dot" with a small circle around at either end of a straight line. When the transfer paper is removed the dots are connected with a straight edge directly on the material.

2G. USING RANDOM-RANDOM STOCK

The Bill of Materials in our plans often use the terminology **"random-random"**, meaning varying lengths and widths. Most large lumber suppliers, particularly those supplying wood commonly used in boat building don't buy material already milled such as the common 1" x 6" or 2" x 4" sold in lumberyards catering to home construction.

Their lumber comes unfinished, neither the edges or outer surfaces are milled or planed. The material comes in lifts or groups of a common thickness, neither the length or width is consistent. A lift containing four quarters material will be slightly more than 1" (hence "four quarters") in net thickness in the rough. Widths and lengths will vary; the lumber is rough cut from the sawmill to obtain the most stock from the felled tree without thought of what the finished size may be. Think about it; if a tree is sawn up to make a special sized lumber there will be a lot of material that is scrap. Guess who pays for it; you the customer. More valuable lumber could be very expensive if sawn to specific sizes with excessive waste. Using the entire tree with minimal waste holds the cost down and reflects to the consumer.

Many small yards will mill and stock lumber to standard sizes. Obviously someone must pay for the waste and the time spent in sawing to size, again that's you the consumer. Some yards finish the stock to thickness, usually 3/4" to 13/16", for four quarters stock. Lengths and widths are as they came from the mill. That's the stuff for boatbuilding you want. You can rip it to size yourself getting as much from the stock as possible. Obviously, if you have a choice, select the longest and widest stock available without paying a premium. Most suppliers do charge extra for wide widths and long lengths.

Many boat parts are irregular in shape. Arced shaped parts, such as deck beams, can often be nested one inside the other. A 5 1/2" width may provide a single beam while two may be obtained from an 8" width. A 6' long beam can be made from a single length, but perhaps two can be obtained from a 9' length. It is readily apparent the wider the width and lengths the more usable material you obtain for the buck.

Check the Bill of Materials for the boat being built. Find the widest width needed and roughly total all the strips or other pieces and change to square feet of a given thickness. Be generous; material lists seldom cover the interior structure and some waste (or don't you ever goof) is inevitable. Remember when using random- random stock it'll be cheaper than sawn to size material, so in the long run you'll be ahead costwise.

That's why we prefer to call out random-random stock, particularly for frames. In our shop the random widths are piled in roughly the same widths. Working from the templates,

we select the most appropriate width and length for the parts being produced. Outfall filters down to parts for a smaller kit so the waste is minimal. The footage of lumber we use to make a frame kit will always be less than the typical home boatbuilder; we have the selection advantage and templates to work from. With care however, the builder can save on lumber by thinking and taking advantage of random-random stock.

###

2H. THE CASE FOR LAMINATIONS

Let's face it, the lumber and plywood we have to work with today is not what it used to be. The old growth trees that used to be common provided a much higher percentage of clear material and were cheaper for the mills to process. Today the mills are harvesting 30-year-old trees that yield a lot more material with knots and other defects and winds up costing more.

In some applications, lesser quality woods or plywood can be laminated to improve the strength and to make longer lengths suitable for boatbuilding applications. Epoxy adhesives, with their gap filling qualities, have made laminated wood a more reliable process for the home builder. Properly used epoxies make wood-to-wood junctions that are extremely strong and durable. So why aren't laminations used more often in boatbuilding? Well, laminating small members to make larger ones is time consuming, can require a lot of epoxy, and in some cases laminates are neither desirable nor an advantage.

In the following we'll discuss some work that has been done with laminations, some unusual and out of the ordinary.

A PRODUCTION METHOD

Several years ago, some southern California professional builders were producing sheet plywood boats with all plywood laminations for keel, stem, chine, and sheer. The method may also have been common to other parts of the country. The boats were built on a form or jig and the laminations made over the form. These boats were in the 20' range with keels laminated from mostly 3/8" plywood, usually about 6" wide aft and extending forward and bending in the forward section to form the stem with the width reduced to about 2". The aft portion of the keel was about six laminations or so thick with the stem section more than twice that. The stem laminations ended stair step atop the keel (into a notched form) to spread the stress. The joining laminations were scarfed or butt joined, staggering the joints so that no two ended at the same point. Numerous clamps or clamping fixtures were used to hold the laminations while curing. I did see one innovative builder clamping a rubber strip from a truck inner-tube to the keel and tightly wrapping it diagonally with the final end secured by another clamp, thus reducing the number of clamps required.

The chines were made similarly from plywood lamination, much wider and thicker than in conventional practice because so much was eventually faired away. The forms were cut off diagonally at the chine point and the chines were set in diagonally across the bottom side junction. Bending was simple, not always easy in conventional chine construction.

Obviously fairing these lams was quite a chore, particularly the chine. The builders used electric planes and routers on special fixtures to accurately fair the members, in some cases disc sanders with very coarse paper were used to initially remove the surplus.

The inner sheers were also plywood, bent in place after applying the bottom and sides and righting the boat. The laminations were applied directly against the side plywood and again they were rather oversize. Those familiar with bending wood know that wide thin uniform strips can't practically be bent around the typical plywood boat with forward flare. Such a member cannot be forced up or down without "kinking" so the laminations were sawn to shape. Templates were made and subsequent laminations duplicated with router or collar shaping. No fairing was required as the member sides to the planking, however, beveling for the deck was necessary. When the hulls were removed from the form they had no frames, though sometimes frames were added.

Note that the boats built using laminated longitudinals were production boats and the expense of the fixtures usually makes it impractical for building a single boat. However, the method may suggest some possibilities to the innovative builder.

IN STITCH & GLUE

We've used bottom batten and keel laminations in stitch and glue boats for quite some time. However, these are applied after the boat shell has been formed. All plywood laminations or combinations of plywood initial laminations capped with a solid wood-reinforcing member have worked out well. Wider battens spread the support area, provides additional gluing surface, are easier to install, and thinner laminations make the bends more easily. Battens laminated from plywood have never become common on conventionally built plywood craft. In a vee bottom boat, it is difficult to bend the thin wide strips toward the stem in a nice fair curve. Reducing the width as the bow is approached helps, but getting the laminations to bend to a shape that will match the plywood planking is a problem. Insurmountable? No, but again a lot of thought, work and possibly some shaped fixtures may be required.

COMMON PRACTICES

Plywood laminations on the inner surface of longitudinals have long been used to prevent splitting. The centerline keel seam is critical and when a solid member has two halves of sheet plywood fastened to it a local stress occurs. A lamination of plywood applied over a solid wood keel need not be thick or continuous, 1/4" plywood on smaller boats, fitting between frames on the inside, is usually sufficient. If using epoxy adhesives, only minimal fasteners are required; epoxy adhesives, properly used, have proven to be as strong as the wood itself.

Laminated beams for deck or cabin tops are a natural for laminated construction and have been used extensively for years using either plywood or lumber. Laminated beams are stronger and use considerably less material than sawn members but do require a jig or fixture for forming. Three laminations are the minimum to use. Some builders make the laminations wide and rip it into several beams. Always leave a little extra for cleanup, as possible misalignment of the llaminations and cleanup is usually required. A problem with laminated beams is that they will collapse slightly when taken off the gluing jig.

Replacing sawn frames on a vee bottom boat with frames made from laminations is impractical, but advantageous on bent or round bilge boat frames. However, in highspeed vee bottomed boats with solid wood bottom, frames are often laminated with thin plywood to prevent splitting; longitudinal motor stringers laminated with plywood can be significantly stiffened. Note, when I discuss plywood laminations for frames, they are used so that the veneers are parallel to the planking. The longitudinals are fastened to the frames and fasteners do not hold well in edge-grain.

Heavy skegs or keel members made from laminations have the advantage of being more stable and easier to handle. On inboard installations where a shaft hole goes through a heavy skeg, the hole can be progressively cut or drilled in the laminations, eliminating the typical long boring tool required for solid members and avoiding the ever present possibility that the long hole is not drilled in correct alignment.

Although it would be possible to laminate long longitudinals from shorter pieces, it requires a lot of work and glue, and a long scarf joint is a more practical solution. We've used multiple laminations of solid wood or plywood for transoms, corner knees, stems, keels, battens, planking, cabin tops, decks, hull planking and undoubtedly other places that haven't come to mind. So during your building, think laminations, or at least consider them. P.S. solid wood laminations also look nice.



Above: Laminated Stem on a Sea Knight build

IN SOME APPLICATIONS, LESSER QUALITY WOODS OR PLYWOOD CAN BE LAMINATED TO IMPROVE THE STRENGTH AND TO MAKE LONGER LENGTHS SUITABLE FOR BOATBUILDING APPLICATIONS.



2I. FASTENING SHEET PLYWOOD TO FRAMES

Building boats planked with sheet plywood started around the WW II era. Before that, the adhesives used to make plywood were, in short, worthless for marine application; the plies would delaminate in a heavy fog. After the adhesives were improved, it took a long time before professional boatbuilders would use plywood because of its previous problems.

Builders of the time planked boats with solid wood with many seams. When plywood started to be used, builders logically built the same framework and attached the plywood in the same way as they had done with planks. Rarely did that work out. Boats planked with sheet plywood wouldn't conform to the shape of a planked boat. A surface developed from a segment of a cone or cylinder was required to enable the sheet material to bend to natural curves. The method is known as "sheet plywood development".

Most builders retained the closely spaced frames with many longitudinals and a zillion fasteners. Then someone reasoned that all that framework wasn't required . Further down the road, many production boats were monocoque; the boats were built over a form with stem, transom, chine and sheer the only framework members. After the hull was removed from the form and righted, they were reinforced with internal framework, primarily longitudinals. This eventually led to current Stitch and Glue boatbuilding.

But before that progression, the sheet plywood boat framework resembled that of its predecessor, the planked boat. At about the same time, more powerful motors such as the automotive V-8's were converted and installed in the new plywood boats. This was before the advent of superior epoxy adhesives and epoxy based putties for fastener holes.

At higher speeds, the putty over the countersunk fasteners would come out, water would catch the outer plywood lamination and eventually rip out the outer plywood lamination, starting at the screw hole.

This condition was primarily observed across the plywood at frames that contacted the bottom, longitudinal fasteners caused minimal problems. The logical solution was to eliminate cross fastenings in the bottom frames, and it worked. Some builders even went so far as to relieve the frame so it had no contact to the bottom planking. This also worked well and today is quite common in faster sheet plywood boats, although in slower boats the frame contacting the planking is still prevalent. However, fasteners are preferably NOT used across the planking in any sheet plywood boat.

Fairing a sheet plywood boat framework so the planking will perfectly contact the frames is wonderful in theory, but virtually impossible in practice. The frame will either contact the planking causing a hard spot or the reverse. In many sheet plywood boats, side battens were eliminated or minimized and this accentuated any out of sync frame. Fasteners driven into an out of sync frame causes a visible bump or dish that will mirror through the finished planking. This becomes more visible on dark painted sheet plywood planked sides. Eliminating fasteners and relieving the frames so they did not contact the plywood solved the problem. Many die hard builders and older texts still retain the notion that sheet planking should contact frames. The latest practice allows the sheet plywood to take a natural bend; it isn't being forced against framework to form an unnatural compound curvature.

Many have questioned why we do not advocate fastening into frame on sheet plywood boats. The foregoing is our reasoning and is proven in practice. Should the planking be glued to the frame? Why not? Thickened epoxy adhesive on the frame will fill in the void and make positive uniform contact as developed by the planking. Plus it's a preservative for the otherwise exposed frame edge.

A boat built using the described procedures will not have bumps or hollow spots or framework mirrored to the outside. It'll be a smooth uniform surface and even black painted hulls are practical. Plus that it's proven to be durable. Why build any other way?

###



2J. NOTCHES FOR LONGITUDINALS

This discussion refers to sheet plywood boats built by typical plywood on frame methods using athwartship frames at frequent intervals. For clarification, our definition of the term chine and sheer follows.

The chine is the longitudinal wood member backing up the junction of the bottom and side. The sheer is the longitudinal at the top of the side planking and backs up the junction with the deck, if used. Again, to further narrow this discussion, we're assuming the boat is a flat or vee bottom with flare to the sides; the sheer line is outside the chine as seen in plan view.

Frame notches can be precut before mounting the frames on the building form or after they are set up. Most builders prefer to pre-notch but it makes little difference; hand beveling while on the building form will usually be required. The patterns may show the cut outs in the frames that are required but don't automatically assume these are the exact size. Check the width and thickness of the stock actually being used and alter the notches to match. In most cases the precut notches will need to be angled while on the building form so it's usually preferable when you are precutting notches to make them undersize and trim as required when fitting the chine in place.

We usually notch for battens after the chine and keel have been faired to receive the bottom planking. Then notch the frame the precise thickness of the stock being used. Very little if any fairing of the batten will then be required. We use a portable circular saw set to the required depth to notch frames for the battens, a router also works well. Since frame notches for battens may require and angle a swipe or two with a wood rasp may still be required.

Select the lumber with care, particularly that for the chine and sheer, good vertical grain stock properly dried and free from knots or other defects is imperative. Sized to the plan specifications, the chine and sheer longitudinals should be at least a foot or so longer for trimming to fit.

CHINE

Spring the chine member around the boat lapping over the stem and transom. It's nice to have the chine fit against each frame securely, but it seldom happens. Typically the chine lands securely against the frames in the aft section. In the forward section the chine must twist, a bar clamp tightened on the chine will provides a "handle" to give leverage.

The side of the chine may not land securely against the side of the frame, it will probably protrude. However, the chine must solidly fit into the frame notch. The portion that protrudes must be removed during fairing. Consider carefully; the side planking must have a solid landing on the chine side and the bottom must also firmly contact the chine.

Notch the frame as required so the chine protrudes so this can occur. Cut 4" or so off the end of the chine for use as a guide. Hold this block against the chine with end butting to the frame, then mark the contour for the notch required and do the same on the opposite side of the frame. Saw the frame notch and recheck with the sample block. If the fit is not precise, use a file or wood rasp to clean up the notch. Take care that the side frame does not project past the chine as this will tend to create a hardspot and mirror through the plywood planking.

SHEER

Frame notches for the sheer are marked with a portion of the sheer member as described for the chine. Again adequate landing must be provided on the sheer for the side planking and deck (if used). Boats that have considerable flare to the sides and a sheer profile of an arc may need to have considerable material removed in fairing. In some instances, the faired sheer in the forward section may be almost triangle in shape.

Notches in frames for longitudinals is not difficult if you think in advance. We'll repeat it again. The mating planking must land securely on the logitudinals.

LIMBERS

What are limbers? Limber is a nautical term for drains in longitudinals or cross members to allow water to flow to the lowest part of a boat. They are usually thought of as being used along the keel but they should be used anywhere water is liable to be entrapped. Most trailered boats have the limbers so bilge water drains aft to the transom to exit through drain plugs. These drains are best equipped with a removable plug or cap connected to the main body. It's embarrassing, to say the least, to drop a drain plug overboard or lose it in the bilge... it doesn't hurt to have a spare plug.

Sailboats or similar craft that have the lowest point in the bilge close to the longitudinal midpoint will have drains in the bottom. In either case bilge pumps that purge the water from the boat can be used; a must for boats that remain in the water. Fresh water left for long periods, particularly in a wooden boat, can raise havoc. Boats on dry land stored with or without a cover should have the drain plugs removed. If the drains are at the transom the tongue of the trailer should be raised so any rain or condensed moisture will drain out.

Q.

How many and how big should limbers be? On a fully framed boat, where frames contact the bottom, limbers should be cut in the frames on the outside of all longitudinals. Make the limbers as large as practical without weakening the structure. Small openings can be readily plugged by bilge debris. Boats that are trailed to and from the water are usually washed down after use. It is imperative to have all water drain aft to exit through the drains. Having to use a sponge to remove water pocketed in areas that won't drain is tedious and you don't want to have to do this any more than you have to. A common area for water to pocket is alongside the longitudinals, usually battens, as they junction with the transom. A notch cut athwartship on the batten enables water to flow to the centerline alongside the keel and out the drains. Such a notch should not cut away more than half the longitudinal and a reinforcing block used on the inside over the limber. Limbers should be cut during the building, usually just before planking the boat. Think ahead and consider how bilge water will flow to the drains. Cutting limbers after the boat is built is both tedious and usually sloppy. Thinking ahead will save a lot of unnecessary hassle.

2K. FITTING THE CHINE

A chine in a boat is the backing member of the side and bottom planking and is typical on a hard chine hull, meaning an abrupt angle change from bottom to side, not a radius or round shape. In other words, the chine is the usual longitudinal backing typical on vee bottom boats. The backing member is properly a chine "log" but over the years the single word chine has become commonly used.

There are numerous methods of making chines but this discussion will cover the typical solid wood chine on a runabout or sailboat built with sheet plywood or diagonally coldmolded, although the suggestions given will apply to other craft.

The lumber used for chines, should be selected with care; good, clear, straight-grain stock, knot free, neither over-dried nor wet. The species of wood can vary widely, but it should accept glue and fasteners well. A chine is highly stressed and soft sugar pines or similar wood should not be considered.



The forward frame is beveled so that the chine will have a flat landing.

The chine typically extends from stem to stern, preferably is a single piece, and should be at least a foot longer than the installed member. Usual practice is to have the side of the chine parallel to the side frame, although this is not always the case. Sufficient landing must be provided for both the side and bottom planking. Typically, the side planking is lapped by the bottom in the aft section while butting together near the stem. The member will require bending and twisting to force it in place. Each frame should be notched and beveled so the chine fits tightly against each of the frames and transom. The chine should bend naturally against each frame so that after fairing (beveling), adequate stock is available for fastening the bottom and sides. The bend may be stiff, but should scribe a clean fair line without dips or humps.

Bending and shoving the chine exerts considerable stress

on the hull framework so be sure the structure is well braced and won't move. Bending in the chine for left and right sides simultaneously is desirable to equalize stress. Some, however, feel doing one at a time is preferable and the lesson learned on the first makes the opposite sides easier.

A few hints on bending the chine in place. Fit the junction with the stem first leaving overhang at the transom. It'll probably take several cuts to properly fit the chine to the stem. Use clamps to hold the frames in the frame notches in the aft section. C or bar clamps anchored to the forward portion of the chine will provide leverage and a handle to bend and twist the chine against the stem while fitting. The actual position of the chine on the stem is not critical. Twisting the chine will alter its ending on the stem. Move the chine at the stem up or down so it forms to the frames and mates flat against the stem contour. This can be visually illustrated by using a 1/4" plywood strip the width of the chine extending aft of the stem a frame or so to represent what the actual chine must accomplish. The thin plywood will exaggerate what will take place when the solid member used is bent in place. Sometimes the chine will simply not mate to the forward frame so it parallels the side. A small amount can be faired off but realize an excessive amount may destroy the member's integrity. The following assumes the boat is being built upside-down. If the top edge of the chine does not mate solidly against the forward frames, try twisting the chine and letting it land on the stem closer to the sheer edge. If the chine lower edge projects, try moving the chine/stem junction the reverse direction. If you have the chine in place and one of the above conditions still exists, all is not lost. Shims on the inner or outer surface can be used to add material to the chine so it can be faired properly. Finish an outer shim in a long taper so the transition from chine to shim is a smooth fair plane.



The chine sides to the stem in a long compound taper as it junctions against the stem side; typical construction for this type of craft. However, a continuous flat area for the side and bottom planking, stem, and chine must result after fairing.

Easier said than understood by most. The stem is usually partially beveled, but final trimming done after the chine is permanently installed. If the chine protrudes too far, it can be faired to a certain extent; if set in too far, a shim will be required.



The photo above illustrates a plywood fixture we have found helpful to determine the position of the chine on the stem side. Keep in mind what has been stated in the foregoing. The bottom and side must mate to the stem and chine on a continuous surface. The chine can't be located on the stem so that the stem/chine junction cannot be faired to a flat plane. Take small pieces of plywood and simulate the side and bottom joining on the stem to help visualize what the finished junction will look like.



After the chine is fitted, pre-drill screw holes for the stem ending, coat all mating surfaces with glue, preferably epoxy. Have a helper hold the chine obliquely away from the boat and position the chine at the stem with a single screw. Use a clamp, rope, Spanish windlass, or braces to hold the chine against the stem if the screw junction is not adequate. Spring the chine around the boat, and when in place, drive a second (or more) screw through the chine into the stem then progressively fasten into the frames. Often, screws holding the chines into the forward frames are omitted at this stage, and the member clamped in place or a finishing nail in a pre-drilled hole or a thin drywall screw. If a large countersunk hole is drilled for a screw, at the point of severe bending, the chine will probably break. After the glue has set and the boat is planked, the screw fastening can be installed. Keep bending the chine after fastening into the frames. Most prefer to leave the chine extending past the transom, trimming to fit, when most of the fasteners are holding the chine to the frames.



We haven't had to steam chines in place on any of the GLEN-L prototypes. However, we choose the lumber with care and have a big stock to select from. If the member seems difficult to bend, the chine can be forced in place as far as possible. Wrap the area of greatest stress with old towels, pour boiling hot water over the area, and immediately bend in place as far as practical. The process can be repeated several times if necessary; bending the chine progressively forcing it in place. When released, the chine will retain a partial set but can be re-bent in place easier.

Most who have trouble bending in the chine have not thought through the process. And of course as described above, you can usually fix a goof with shims. But, that should not be necessary. Use a short length of the chine to see how it fits against the stem. Use scraps of plywood to simulate how the bottom and sides must mate to the stem and chine. If you fully understand how the chine mates at the stem and frames and how the side and bottom must lay flat against the member, the actual process becomes easier. In other words, THINK before you start fitting the chine in place. ###

2L. FAIRING TOOLS

Fairing, as referred to in boating and as it applies to this discussion, means angling, beveling, and shaping the framework of a boat so the planking or decking will lie flat to all members and not just rest on edges. Fairing is required on most wooden boats except possibly stitch-n-glue craft where the process is virtually, but usually not completely, eliminated. The amount of fairing required varies. A flat bottom rowboat won't require the shaping a vee bottom hull with compound curvatures will.

After the boat is completely framed and ready for fairing, fear strikes many neophytes. Not that fairing is difficult, it isn't, but it is confusing for the first time builder. Taken a small step at a time and thinking the process through simplifies the project. Some builders, however, start whacking away without the faintest conception of what must take place.

Installing longitudinal battens AFTER fairing is overlooked by many. It's easier to notch the battens into frames or bulkheads from a faired surface to the exact depth required. A hand held circular saw, or enlarged base router set to the required depth cuts the notches accurately and quickly. Battens installed after fairing should require minimal shaping while those installed from unfaired surfaces could require unneeded and undesirable removal of stock.

The purpose of fairing is to shape the framework so the mating member, deck or planking rests firmly in place. Take a couple of battens or strips of plywood of width to extend half the beam of the hull, to simulate how the planking must mate to the framework. When working on the bottom, bend the batten athwartship from keel to chine. It will be apparent that some high points will need to be faired if the strip simulating the planking is to lie flat. Do this along the bottom and from chine to sheer on the sides. Bend the strip longitudinally over several forward frames and the stem. Typically, a lot of beveling will be required along the stem, and note that most angles are ever changing. If the angles were constant, they could be precut. In conjunction with, or after rough fairing, simulate the planking on the boat with sheets of plywood or portions of the planking used. Visually seeing what fairing is required and understanding it will make fairing much easier.

A common fairing method simulates the bottom planking, as described above, that will lie on a chine for example. A file is used to make a notch in the chine to the angle that would be required so the planking would lie flat. This procedure can be repeatedly done along the chine and will serve as a guideline as to the amount of material that must be removed. The stem and other areas can be done in this same manner. Just remember, the plywood, solid stock, cold mold, strip, or carvel planking must mate solidly to each supporting framework member.

After doing some fairing, each individual develops a favorite

tool (or tools) that does the task efficiently. Some use only hand tools, others primarily portable power tools. In almost all cases, a good fairing job will require the last phase to be done by hand.

Let's consider the area that requires the most fairing, usually the stem that in many of our designs is plywood laminations. Trimming a bevel on a long plywood edge with a hand wood plane is slow work. A good husky wood rasp will take off a lot of material in a hurry. One professional boatbuilder, who had formerly been a shingler, used his razor sharp hatchet, to rough trim the angles required. This is much like the wooden shipbuilder who uses an adz for rough trimming, some with amazing accuracy. Rough finishing is still required, usually with a hand plane or possibly a file.

A power plane can remove a lot of material in a hurry, but it is easy to remove too much. The favorite power tool for rough fairing used in our shops is the disc sander with coarse sandpaper. It can take off a heap of material in a hurry, but again, removing too much material is easy. Other sanders are usually reserved for finish work. Some will use a belt sander and although it can remove material quickly, it's difficult not to get a rounded surface or undercuts from the belt edge. A router or belt sander mounted on a jig has its advocates but, in most cases, the fairing can be done by other means quicker than a fixture and tool can be set up. But again, if you have a special tool and are proficient in its use, it may be preferable for you. Getting the fairing done correctly is the important task, not how it's done.

In our shops we finish the fairing with a hand plane followed with a thorough sanding with coarse paper. The sanding is done with a sanding belt cut to make a long single piece fastened to a flat board. Pushed back and forth diagonally across the boat helps smooth any projections. However, if the athwartship sections are convex, concave or reverse curves, the sanding board must be used in varying fore and aft directions. Care must be taken so the beveled edges are fair. The curved surfaces must be true curves without humps or dips.

What if you goof? If you butchered a deep dip in the member, fill it with a wooden shim epoxy glued in place. Remove any humps, but take care, often a hump is concealing a dip on either side. Stand back, sight along the lines, hold your face sideways, upside down, and every which way. From any angle the surfaces must be fair.

Still getting a positive surface for the planking or joining member can be difficult. Modern technology has come to the rescue. Epoxy resin with thickeners, silica or microspheres, will fill reasonable gaps and still have structural integrity. Care is required if, for example, a dip is being filled with thickened epoxy. If screws are driven fully home, the planking or mating member will undoubtedly follow the dip. To prevent this, use a wax or plastic covered wood strip fastened at the ends to bridge the gap and omit fasteners in the filled area until after the adhesive cures.

How long does fairing take? How far is up? A good boatbuilder with the correct power and hand tools will probably fair a typical 16' plywood boat in two hours or less. Could you do the fairing in this time? Very doubtful, perhaps a half day or even a full day would be more like it.

###

2M. DOUBLE PLANKING HINTS

Many vee bottom boats use two laminations of sheet plywood to form the contour of the forward bottom. The bend may be difficult or impossible with a single layer of the thickness required. Over the years we've tried many methods of applying double planking, some worked some didn't. In the following, we'll provide a few hints as to some procedures we found that made the task easier and provided a positive bond between the laminates.

Frequently only the forward vee section of the bottom planking is made with two laminations of sheet plywood while the aft flatter section is applied in a single layer. Obviously, the two laminations must be equal to the thickness of the single aft plywood panel, two layers of 1/4" forward butting to one layer of 1/2" aft would be equal. Right? Possibly unless you get "scant" plywood. Yes Henry, math has changed; 1/4" plywood is not .25", 1/2" is not .50, etc., scant plywood is about 1/32" less in thickness. Now you understand why few understand "new math". True marine grade plywood is not scant, but much exterior is. In any case, be sure the double plywood layer thickness is the same as the single joining panel.

Plywood bent around the bottom vee of the typical sheet plywood planked boat is convex in shape, a section of a cone. Depending on how the plywood is bent, the contour can change slightly, but perhaps enough to cause a void between the laminations. We've found that forming each layer of the forward vee in the same manner is desirable. This applies whether fitting or permanently fastening the plywood in place. Fasten the plywood along the keel to a point where the major curvature starts aft of the stem/keel junction. From that point, go out at about a 30 degree angle forward from the centerline in plan to the intersection of the chine and force the planking down. The angle is not critical and will vary from boat to boat. The principle is to fold the planking down from the stem to the chine; not fold from the chine to the stem. Each lamination should be bent and fastened in approximately the same manner and sequence.

We prefer epoxy with thickeners added as the adhesive between the plywood laminations. Silica #1 added to the activated resin to form a soft butter-like or thick syrup

consistency will provide void filling capabilities with positive adhesion. Prime both contacting surfaces with activated resin followed by a generous coating of the adhesive rolled on with a short nap foam roller. Work quickly and have a helper; particularly if the area is large.

How do you know if the two layers mate solidly together? Before applying the outer layer, drill some small holes in the outer lamination about 6' apart, well staggered inward from the keel, stem, and chine. When the outer lamination is bent in place, the adhesive between should come out of the holes. Try rapping the outer surface after application lightly with a mallet, it'll help fill small voids with the adhesive. There is also a different sound between contacting areas and those with a void.

There are several methods that can be used to force the planking laminates together. If you are fortunate to be working in a garage or similar structure, use uprights extending from joists or other roof structure and wedge to the planking surface. Any number of these can be used to provide firm pressure and assure a positive bond between the glued planking panels.

The planking layers can also be forced together by weighting the outer laminate to force it against its mating counterpart. Plastic bags filled with dirt or sand draped over the surface will form readily to the arced contour. Alternately or additionally, use temporary screws with a plywood washer under the head driven through both layers. For more tension, use a block on the underside to give the screw threads more pulling power, or use small bolts with washer blocks under head and nut. Washer blocks are usually 1/4" plywood about 2" square. A long strip of 1" wide plywood run diagonally from chine to keel or stem both top and underside fastened with screws or through bolted. Make sure washer blocks have a sheet of plastic wrap or wax paper between them and the plywood so they are not glued to the planking. A power staple gun is a fast way to drive fasteners and force the two layers together, but may not have enough holding power. Staples should be removed after the adhesive cures. Driving them through a strip of plastic filament tape will facilitate removal. After cure and removal of all temporary fasteners, fill the holes with thickened epoxy and sand smooth. ###



Photo shows double diagonal process using plywood cut in strips on the bottom of this boat. Note the curvature developing that would not be possible if a sheet material alone was used.



Above: Cold molded boats can be either round bilge or hard-chined. In either case planking is largely glued (epoxy) and fastened to longitudinal stringers notched into frames or bulkheads that may be spaced farther apart than might be the case with more-traditional planking methods. More about cold molding HERE.

SECTION

03 MECHANICAL

ON STEERING AND INBOARD MOTORS



3A. STEERING FOR BOATS

A boat turns in one direction or the other by a rudder of an in line inboard or by pivoting the propeller and lower unit on an outboard or outdrive. There are three basic methods of rotating the turning action required and transferring it to a convenient position actuated by a steering wheel or lever; cable steering, single push-pull cable, and hydraulic. There are others such as drag links but they are not common.

DRUM CABLE STEERING

Table steering has been around forever and earned a bad reputation, not without reason. This system operates through cable fastened to a pivoting arm on the rudder or outdrive (or outboard) and sent forward through pulleys to wrap around a drum fastened to the steering wheel. Properly set up, such a system is practical and reliable. Use clothesline rope, awning pulleys, or similar ill thought out replacements in the system and you're notonly asking for trouble, you'll have it.

The term "cable" refers to the flexible plastic coated steering cable or stainless steel 7 x 19 wire rope typically 5/32" or 5/16" in diameter. At aft terminals the cable is looped through eye straps securely fastened to the hull and held with clamps intended for cable steering systems.

Pulleys or sheaves used in cable systems should be approximately 16 times the cable or wire diameter with a 2" minimum and may be fixed or pivoting types. The latter are common for smaller boats and special plastic/stainless steel with attaching eyes are available. Some "head scratching" must be used in planning so that the leads are fair and straight and the cable runs smoothly in the sheaves. Cable running in fixed sheaves must be aligned parallel to the sheave groove. A great stress is applied to the strap or base that attaches the pulley to the boat hull; bolts are preferable with long screws driven into solid wood satisfactory.

Cables running between pivoting pulleys may tend to sag or not be in a precise straight line. Special cable guides with metal or plastic surfaces will take care of this problem although it is preferable these be minimal in number or better yet the system arranged so they are not required as they can abrade the cable over a period of time.

A major problem occurs when cables are connected at the tiller; this terminology refers to a tiller on a rudder or the arm that pivots an outboard or outdrive. A straight arm projecting from a

pivoting vertical shaft with cables attached as described in the foregoing will have slack in certain sectors of the turning arc. This cannot be tolerated. Special steering tension springs used at the tiller connection (see Fig. 1 and Fig. 2) will eliminate the slack problem. Cables connected to a pivoting rudder shaft with a quadrant as shown in Fig. 3, do not create slack and springs are not needed.

Fig. 1 - Steering Cables

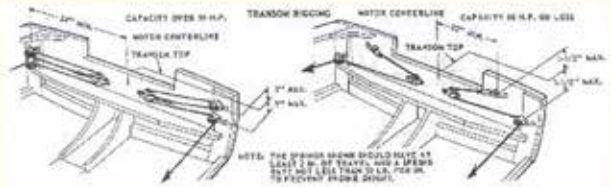

Fig. 2 - Transom Rigging

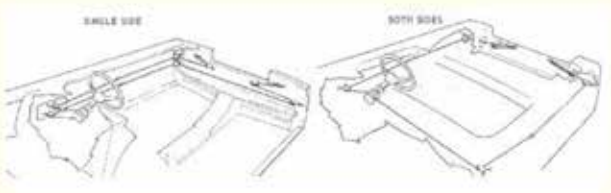

Fig. 3 - Drum and cable steering systems

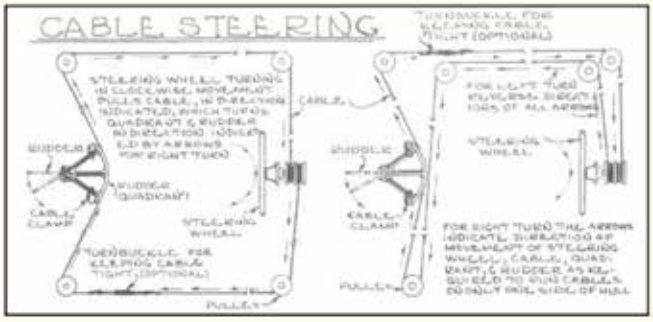

The steerer with drum attached can be of two types, exposed or behind the dash. The exposed drum for the cable is in front of the dash (see Fig. 4) and is primarily used on small hydroplanes or race class monoplanes. Usually only one coaming pulley sheave per side is required and the entire cable is exposed for easy inspection and maintenance. The tiller cable on either exposed or behind the dash types should be of equal length each side of the drum and wrapped 3 or 4 times around it in opposite directions; check to be sure turning the steering wheel rotates the motor in the proper direction.

Drum cable steering is viable but ONLY when properly installed and maintained. Crude materials and sloppy installation and maintenance can cause steering failure that can result in serious consequences. DO IT RIGHT OR DON'T USE IT.

PUSH PULL CABLE STEERING

The push pull cable is the most common steering system used on boats today. A pushpull cable consists of a semi flexible cable that slides back and forth inside a flexible sleeve covering. This outer casing is attached to the steerer and routed aft and

Fig. 4 - Exposed drum steering. Used when there is no room behind dash for running cables.

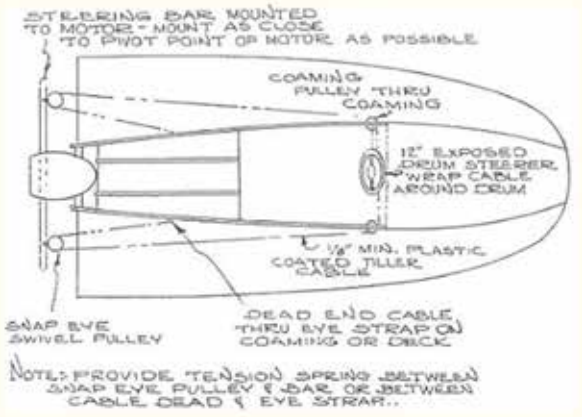

anchored to the boat hull adjacent to the motor or rudder tiller. The interior cable sliding in the covering is actuated by turning the steering wheel coupled to ring gears or rack and pinion to convert the rotation to a push pull motion.

The sliding cable tiller end has a solid or tubular bar that couples to the tiller of the motor or rudder by a swivel fitting to provide universal movement when rotated or to allow tilt up action of the outboard or outdrive. Numerous types of connections are used, those from outboards different than outdrives or rudder junctions.

A push pull system is relatively simple to install. The cable comes in varying length to suit that required. Alternately a garden hose can be used to determine both the routing and length. The hose simulates the practical bends that can be made with the cable as sharp bends are impractical.

Push pull steering is relatively maintenance free. A grease fitting is provided to lubricate the sliding cable and should be maintained per the maker. Corrosion and sticking of the inner cable can be a problem, routing the cable well above the bilge is essential, and cleaning the aft exposed portion should be a regular procedure.

HYDRAULIC STEERING

If you have deep pockets, a good hydraulic steering system should be considered. They are primarily used on larger or more plush boats due to their cost. Basically, the rotating steering wheel operates a hydraulic cylinder to force hydraulic fluid through a tube to actuate a matching hydraulic cylinder. Routing of the connecting tube is simple and a myriad of connection devices are available to connect the fore and aft cylinder motion to the tiller. Some earlier systems did not have the tolerances required for efficient hydraulic use, but as usual, the market place took care of the problem, and hydraulics is an ideal steering system for craft of about 18' or more.

###

3B. OUTFITTING YOUR INBOARD

During the first part of every year is when people start outfitting their boats for the upcoming boating season. It's at this time that we get many calls from folks asking for help with choosing hardware for their inboards. I thought it would be helpful to go over some of the parts needed. If you're unfamiliar with inboard installations, we suggest our book, Inboard Motor Installations.

The following is a description of the various parts and their function in an inboard boat. Refer to the "V-Drive Installation" sketch to determine the location of the parts listed below. Although the sketch depicts a v-drive installation, a direct in-line drive would be similar from the v-drive aft.

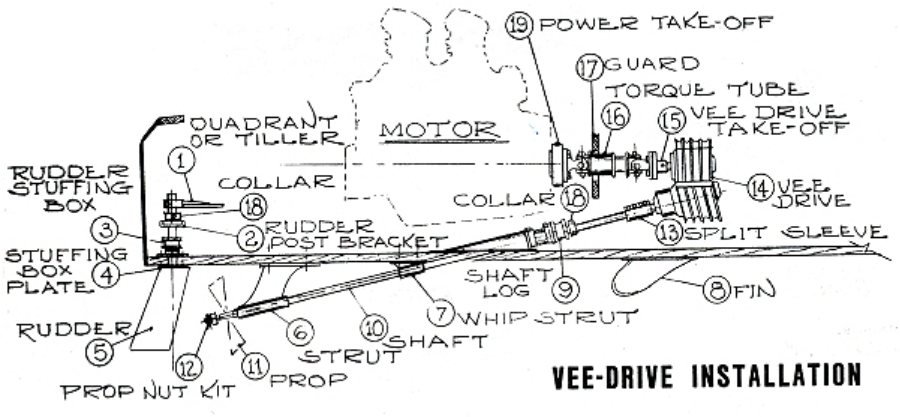

VEE-DRIVE INSTALLATION

#1. QUADRANT or CUSTOM TILLER - A quadrant is required when cable type steering is used. The custom tiller is required when single push-pull cable steering is used.

#2. RUDDER POST BRACKET - The rudder post bracket supports the upper portion of the rudder and provides a bearing for the turning forces from the rudder shaft. These brackets can be mounted between or on top of the motor stringers. To prevent the rudder from falling through the bottom of the boat, a safety collar is used on the rudder above the rudder post bracket.

#3 RUDDER STUFFING BOX - A rudder stuffing box prevents the water from entering the boat through the rudder shaft hole. Various types of seals or packing glands can be used. We recommend using the same type for the rudder as for the shaft log (#9). The packing-type gland may be repacked while the shaft is in the boat. The seal-type requires that the shaft be removed to replace the rubber Neoprene seal. This is why we've always preferred the stuffing type boxes–plus, you can stuff them with shoestrings or whatever you have on hand in a pinch.

#4. RUDDER STUFFING BOX PLATE - The rudder stuffing box plate goes on the outside of the boat. It is optional and often not used on faster boats. It does provide a solid bolting and bearing for the bottom portion of the rudder stuffing box.

#5. RUDDER – Rudders of varying size and shape are listed to suit almost any small boat. Rudder Shafts must be matched to the rudder stuffing box, collar, and rudder post bracket.

#6. STRUT – Struts are available in varying angles and drops to match your installation. Drop is the distance vertically from the base of the strut to the centerline of the strut bearing on the aft end of the strut. Two types of bearings can be obtained for most struts. The Aqua-Lube is a micarta-type bearing. The BJ is a rubber-type bearing and is recommended when the boat is to be used in silty waters. Strut bearings are replaceable.

#7. WHIP STRUT - Whip struts are used to prevent deflection or whipping of the shaft in high speed boats with flatter shaft angles.

#8. FIN – The "V" fin has a vee in the base to fit the vee in the bottom of most boats. The Flat Base fins are usually intended for smaller flat bottomed boats.

#9. SHAFT LOG - The shaft log prevents water from coming in through the shaft hole in the bottom of the boat. Shaft logs are available in varying angles to match the shaft or strut angularity. You'll also need a stuffing box (Refer to #3 RUDDER STUFFING BOX for information as to the types of packing gland), hose and two clamps to complete the shaft log assembly.

#10. PROP SHAFT - Shafts come in standard lengths as noted. Shafts can be cut to the length needed and keyed on the driving end without additional cost. We offer three types of shafts; 303 Stainless Steel, 17-4 Stainless Steel and K-500 Monel. The most common is the 303 Stainless.

#11. PROPELLERS – For all around use, the three-blade conventional-type propeller is generally used. Direction of rotation must be specified. Direction of rotation of the prop is as viewed from the back of the boat looking forward – left hand counterclockwise; right hand clockwise. All propellers are intended to fit our propeller shafts and have standard 1" tapers. Prop size and pitch are based on the motor and boat. Michigan Wheel has an extensive database on their website that can help you determine the best prop for your boat.

#12. PROP NUT KIT - A prop nut kit furnishes the parts necessary to securely hold the propeller on to the shaft.

#14. V-DRIVE MOUNT AND V-DRIVE - V-drives can be obtained that include integral forward, neutral and reverse gears. Others contain forward and neutral, while there are those that have no reversing or neutral position. With the latter, a marine transmission should be used on the motor. The exception to the latter statement would be for full race purposes. Ratios of the v-drives will vary.

#15. V-DRIVE TAKE-OFF - A vee drive flange take-off is used to couple the upper shaft of the v-drive to the torque tube. This flange take-off can be obtained with a vee pulley to drive generators, alternators or other appendages.

#16. TORQUE TUBE - Torque tubes are used to couple the motor to the v-drive or a jet pump. Two series are available, a #1310 and a #1350. For ordinary use with conventional pleasure boats and motors to approximately 400 cubic inches and a torque tube 24" or shorter, the #1310 series is satisfactory. For larger engines and for high speed use, the heavy duty #1350 series is desirable. Note that the motor power take-off and the v-drive take-off must be of the correct series to match the torque tube. The torque tube does have "play" in the spline that will make it approximately 1" shorter or longer than the noted dimensions. If a length other than those listed is needed, the torque tube can be cut and sized to your specifications.

#17. TORQUE TUBE GUARD - A torque tube guard protects the boat and occupants if a failure should occur anywhere along the torque tube assembly. Ordinarily, these are desirable on any of the higher speed boats with torque tubes 24" or longer. Note that these are made to accommodate both the #1310 and #1350 torque tube series. (See #16.)

#18. SAFETY COLLARS - Safety collars are used on top of the RUDDER POST BRACKET (#2) and in high speed craft just aft of the strut or forward of the shaft log as a safety device. Either split or conventional collars are available.

#19. POWER TAKE-OFF - A power take-off connects the motor to the torque tube. The Series #1350 or #1310 must match the torque tube. Drives are available for taking the power from the front end, the flywheel end or from a marine transmission. In most cases, the drive will be from the flywheel end. In many cases, driving from the front end is impractical with motors equipped with harmonic balancers or those with small diameter crank shafts at the driving end.

3C. RUDDERS

The following is not an attempt to explain all the different types of rudders that are available, but rather, to provide enough information to make an informed selection from those we offer in our Inboard Hardware section. The following is taken from our book Inboard Motor Installations, Chapter 16 - Rudders & Steering.

When building a boat, the size, shape, type, and location of the rudder, is usually specified by the designer of the boat. Not all inboard boats however, use rudders, such as stern-drive and jet-drive boats. Depending on the design, the rudder required may be a ready-made item, or details may be provided so that the builder can make his own rudder. On an existing boat that will be re-powered, the present rudder will probably be adequate for the job if it is currently satisfactory and the proposed installation is similar to the existing one. However, if the powering change will be from a single engine to a twin engine, or vice versa, then changes to the rudder and steering system will probably be necessary. If changes in rudders are necessary, competent professional advice regarding the size and type of the rudder should be sought, preferably from a qualified naval architect familiar with the type of boat, or from the manufacturer of the boat. Due to the many possible boat types and rudder configurations there is no set formula for determining rudder size without knowledge of the design.

There are basically two types of rudder systems; those mounted under the boat called "inboard" rudders, and those mounted outside and behind the boat called "outboard" rudders (see Plate 56 and Plate 57). Many shapes and types are available in either configuration, as illustrated, and will vary considerably depending on the speed and type of boat. Generally, the faster the boat's speed, the smaller the rudder can be. Sailboats and low speed powerboats will have considerably different and larger rudders than high speed planing powerboats. However, the rudder principle is the same in all cases. The rudder is a blade in the water connected to a stock or shaft to which force is exerted to turn it one way or the other. This in turn deflects the water moving over the rudder and moves the stern of the boat to make it turn. Note that it is the back of the boat that does the turning, since it pivots about the bow in order to change direction, which is just the opposite of an automobile.

Rudders may be either the unbalanced type, or designed with some degree of balance to make turning easier (see Plate 58). An unbalanced rudder has the rudder-stock or pivot point at the extreme forward end of the rudder and all the blade area is aft of this pivot point. On a balanced rudder, there will be a certain portion of the blade area forward of the rudder stock or pivot point which will decrease some of the force necessary to pivot the rudder. However, the portion of the blade forward cannot be too great a percentage of the rudder area as this will make steering too easy as well as dangerous, with constant attention to the helm being required. In general, the balanced rudder will have an area forward of the pivot point of up to 20% of the total rudder area.

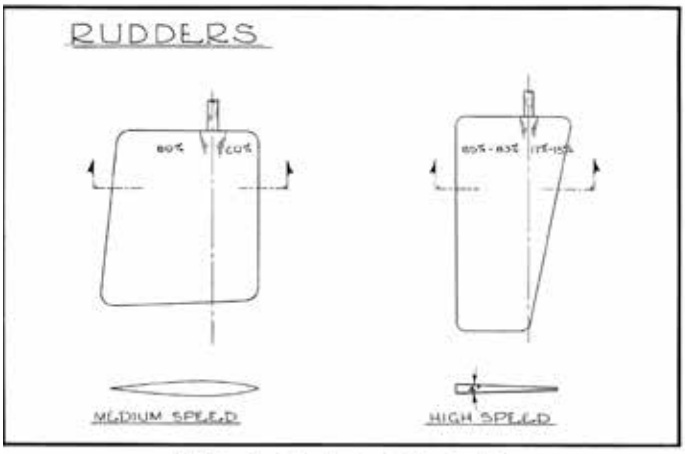

PLATE 58 — Typical sections through balanced rudders.

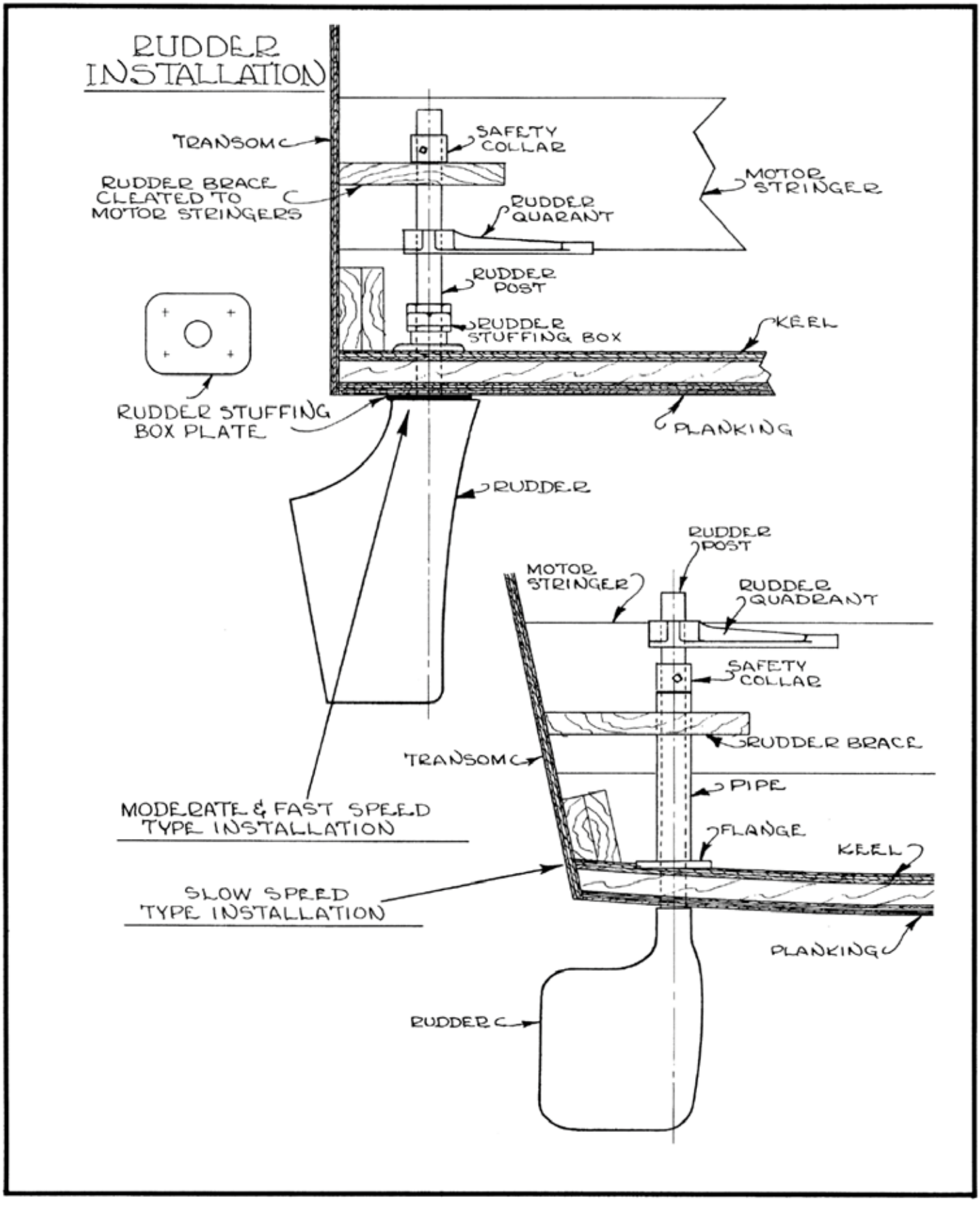

PLATE 56 — Typical rudder installations of the inboard type.

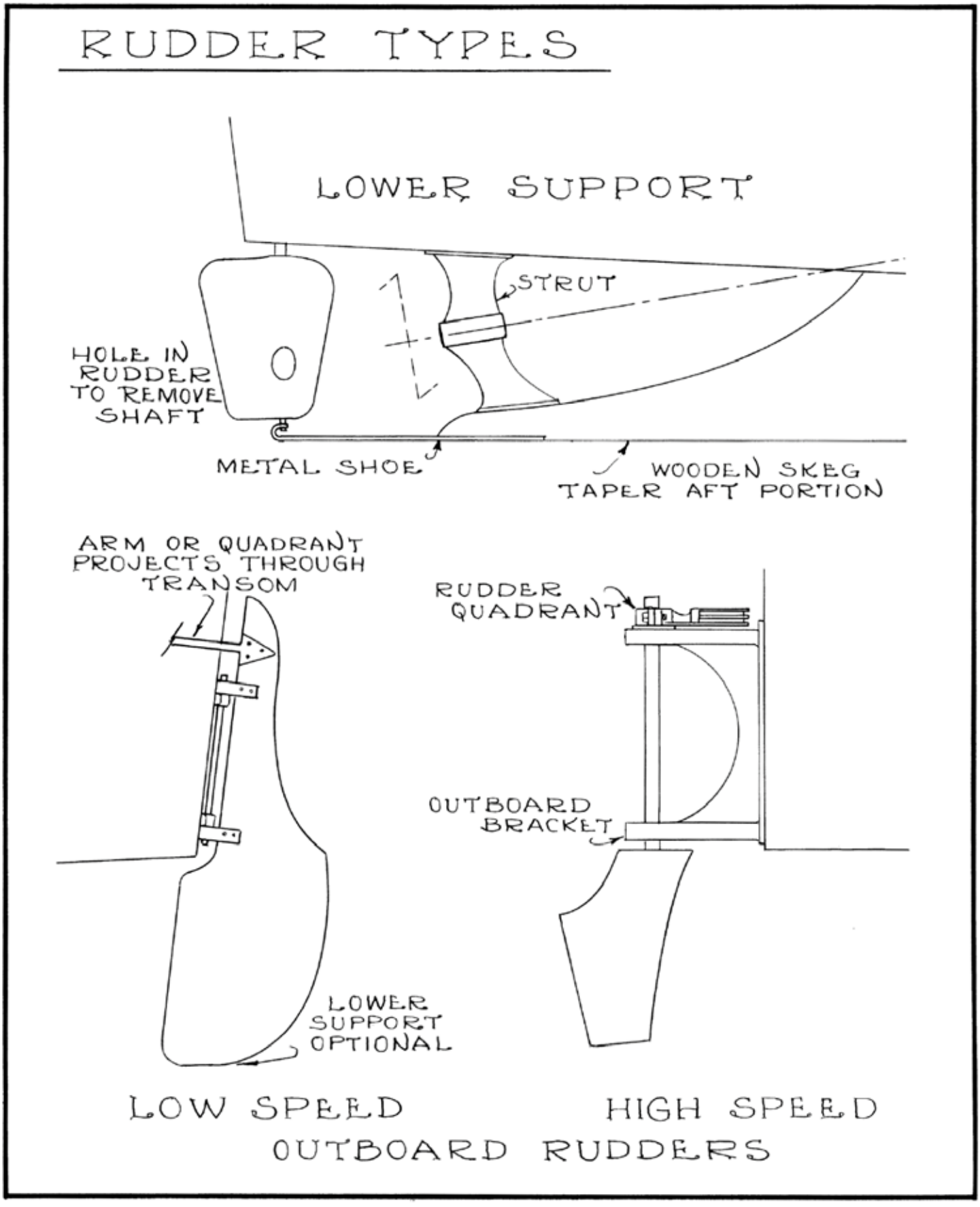

PLATE 57 — Typical outboard rudder configurations.

Since an appendage under the boat such as a rudder can add considerable drag or resistance to the hull, careful attention is required regarding the size and shape of rudders used, especially on high-speed boats. In cross section, the rudder used for slow and moderate speed boats is usually of the "streamline" or airfoil shape as shown by Plate 58. With this rudder the thickest portion will be 25% to 35% along its length (or "chord" as it is called) from the forward or leading edge. The shape is such that fullness is provided along the contours so that they are convex and not straight or concave. This fullness minimizes resistance and provides the necessary lifting forces for turning efficiency. Rudders that vary from this shape may loose efficiency, stall when turned, and also "chatter" or vibrate. While it would seem that sharp leading and trailing edges would be helpful, actually a slight rounded edge or radius is desirable at the leading edge for less resistance. The radius at the trailing edge can be less, but sharp edges are not practical since they damage easily.

On high-speed craft, a wedge shaped rudder is often used, tapering to a fine leading edge forward. This section provides constant pressure to the rudder blade at all areas at higher speeds, and prevents "burbling" caused by the rudder acting in half air instead of in solid water. The degree of wedge may vary, however 4 degrees included angle is a good average. Most powerboat rudders are made from metal, and certain modifications to the above requirements of both slow-to-medium speed rudders and high-speed rudders may be required to suit the method of manufacture.

On slow and medium speed boats, especially if single screw, a single rudder at the centerline is used, supported where it passes through the hull if of the inboard type, and also at the bottom by a skeg, keel extension, or "deadwood" on most boats of this type (see Plate 57). If the rudder is the outboard type, these are usually hung onto the stern or transom with fittings called "gudgeons and pintles". Readymade or custom-made fittings may be required. Rudders mounted on skegs together with the propeller are afforded considerable protection from damage by the boat's skeg or deadwood and are therefore considered highly safe and reliable.

On high-speed powerboats, the drag created by big rudders and skegs or other underwater appendages can drastically reduce or hinder performance. Consequently, rudders are much smaller in area and are usually of the spade type; that is, hung below the boat by the stock without any other under-water support. Usually such a rudder is mounted directly behind the propeller on either single or twin engine boats so that maximum propeller thrust can be used to aid turning. Because of the smaller rudder area, turning is most effective at high speeds. At slow speeds, these rudders are much less effective, and if the boat has twin screws, the engines are often used for directional control. Hence the reason why high speed planing boats are slow to respond to the helm at slower speeds, and the perpetuated myth that ALL types of boats will handle better with twin engines than single engines. Because spade rudders



Fig. 16-6 - When the rudder is beyond the transom, a plate should be mounted over it in line with the bottom of the boat to prevent air from being sucked in during turning to eliminate steering problems. Note the wooden mock up of the plate in the inset. This was temporarily bolted through the drain plug holes to see if this solved the problem before purchasing and installing the final plate.

IN SOME APPLICATIONS, LESSER QUALITY WOODS OR PLYWOOD CAN BE LAMINATED TO IMPROVE THE STRENGTH AND TO MAKE LONGER LENGTHS SUITABLE FOR BOATBUILDING APPLICATIONS.

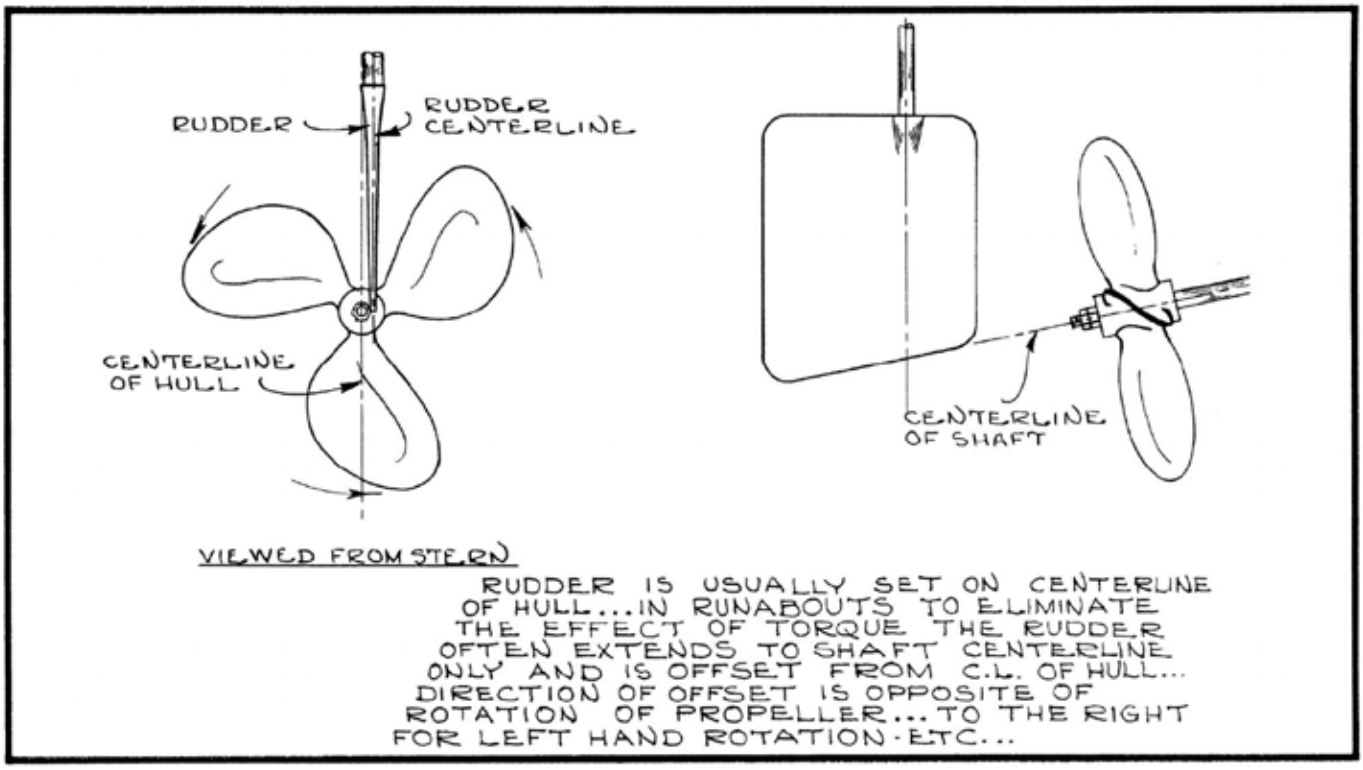

PLATE 59 — Offsetting the rudder to one side will compensate for torque reaction.

have no protection from a skeg or deadwood, they are quite vulnerable to damage, along with the propeller, shaft, and strut, especially if of twin screw. Also, the spade rudder stock requires considerable support and strength to withstand the rudder forces since there is no lower support.

POWERBOAT APPLICATIONS

Rudders should be installed so as to turn about 35 degrees from dead center in either direction and not over 40 degrees. More action than this can result in stalling, or an immediate loss of control, and a drastic increase in strain on the rudder, which could damage the rudder or cause it to fail. Stops are therefore provided at some point in the system to prevent greater rudder angles.

The deeper the rudder, the more the hull will tend to bank or lean inboard in a turn. Normally this is not a disadvantage, except that there is often a commensurate loss of speed in sharp turns. Hence, competition boats capable of high speeds prefer flatter turning angles. If the rudder is too deep, stresses on the spade-type rudder can be considerable. This is why an upper steady-rest bearing is necessary to support the spade rudder stock. On the faster boat, rudder proportions usually will be about twice as deep as the width or "chord".

The rudder must not be located where it will suck air. Since the rudder depends on a constant flow of solid water for turning ability, the presence of air will cause an immediate loss of steering action, and possibly cause propeller cavitation or "ventilating" as well. In many cases, especially on the shorter high-speed runabout or racing type boat, the rudder will necessarily have to be located beyond the transom of the boat to suit the propeller shaft angle and clearances. Such a condition will almost always result in the condition described above, and if it occurs, an extension or "plate" must be used over the rudder from the bottom of the boat to prevent air from being sucked in on a turn (see Fig. 16-6). The problem is evidenced by a severe stream of water or "rooster tail" flying up from the transom area, together with a loss of turning ability.

A powerboat will always tend to turn better in the direction the propeller rotates due to the propeller's torque reaction. Offsetting the rudder slightly to one side, as shown by Plate 59 will compensate for this torque reaction to some degree in high speedboats. In the smaller single engine runabout type, this is why it is desirable for the driver of the boat to be seated on the side toward which the propeller rotates. If the propeller turns clockwise, or right-handed, the driver should sit on the right or starboard side to help overcome the torque reaction. Another advantage to offsetting the rudder from the propeller is that it makes removal of the propeller shaft possible without first removing the rudder. On powerboats of slow to medium speed where the rudder is supported at the lower end, a portion of the rudder may be cut away, or a hole may be cut through the rudder, so that when the rudder is turned, the shaft can be removed.

A universal rudder available from Glen-L.

EVERYTHING YOU NEED TO KNOW IS INCLUDED IN THE PLANS PACKAGE.



Now that we've shared some 40-plus pages of boatbuilding tips and information with you, you might be wondering: Is this everything I need to build a boat? Well, as with any ancient art form there is an almost bottomless well of related information, from design considerations to proper epoxy application, you could spend a lifetime learning more on the topic. But here's the great news: **This book is actually far *more* than you need to know to build a boat.**

That's right, this guide is really just intended as a sampling of various boatbuilding concepts to help round out your knowledge. Countless of our Glen-L customers have built beautiful boats using only the plans, patterns and instructions that come with every plan set. In fact, many of the things discussed in the previous pages—concepts like displacement, capacity, and maximum horsepower—are already established and noted in the plans. But now you hopefully know a little more about how the designer arrived at these numbers.

Building a boat from Glen-L plans is not about having building *knowledge* or *experience*, it's mostly about having some enthusiasm and resolve. Will there be a few head-scratching moments? Sure. But everything you need to know is included in the plans package. If you want to be even better prepared or to know more, our big book *Boatbuilding with Plywood* gives a more thorough step-by-step explanation of the entirely building process and it makes a great resource. If you just want to keep learning more tips, tricks and concepts, try our book *Boatbuilder's Notebook*.

And finally, maybe the best resource of all is our huge network of other Glen-L builders, from newbies to professionals, many of whom be reached at our Boatbuilders Forum, an online message board where you can ask questions and make new friends. And don't forget to send us photos of your boat when it hits the water. —The Glen-L Crew

THANK YOU





Top Image: Dyno Jet design and Bottom Image: Gentry design













Clockwise from Top Left Image Designs: Crackerbox, Amp Eater, Eightball, Barrelback, Amp Eater, Double Eagle

BEING ON A BOAT THAT'S MOVING THROUGH THE WATER, IT'S SO CLEAR. EVERYTHING FALLS INTO PLACE IN TERMS OF WHAT'S IMPORTANT AND WHAT'S NOT.

- JAMES TAYLOR

Glen-L Boat Designs

glen-l.com | established 1953 | support@glen-l.com